PCM-1125
PLASMA ARC CUTTING PACKAGE

Instruction Manual

This manual provides installation and operation instructions for the following PCM-1125 cutting packages starting with Serial No. PORJ138001 :

P/N 0558001248 - 208/230 V, 1 & 3-Phase, 50/60 Hz
P/N 0558001249 - 460 V, 3-Phase, 50/60 Hz
P/N 0558002989 - 400 V, 3-Phase, 50/60 Hz
P/N 0558001250 - 575 V, 3-Phase, 50/60 Hz

F15-707-A **12/2005**

BE SURE THIS INFORMATION REACHES THE OPERATOR.
YOU CAN GET EXTRA COPIES THROUGH YOUR SUPPLIER.

CAUTION

These INSTRUCTIONS are for experienced operators. If you are not fully familiar with the principles of operation and safe practices for arc welding and cutting equipment, we urge you to read our booklet, "Precautions and Safe Practices for Arc Welding, Cutting, and Gouging," Form 52-529. Do NOT permit untrained persons to install, operate, or maintain this equipment. Do NOT attempt to install or operate this equipment until you have read and fully understand these instructions. If you do not fully understand these instructions, contact your supplier for further information. Be sure to read the Safety Precautions before installing or operating this equipment.

USER RESPONSIBILITY

This equipment will perform in conformity with the description thereof contained in this manual and accompanying labels and/or inserts when installed, operated, maintained and repaired in accordance with the instructions provided. This equipment must be checked periodically. Malfunctioning or poorly maintained equipment should not be used. Parts that are broken, missing, worn, distorted or contaminated should be replaced immediately. Should such repair or replacement become necessary, the manufacturer recommends that a telephone or written request for service advice be made to the Authorized Distributor from whom it was purchased.

This equipment or any of its parts should not be altered without the prior written approval of the manufacturer. The user of this equipment shall have the sole responsibility for any malfunction which results from improper use, faulty maintenance, damage, improper repair or alteration by anyone other than the manufacturer or a service facility designated by the manufacturer.

TABLE OF CONTENTS

Section / Title **Page**

1.0 Safety Precautions 5
- 1.1 Safety - English 5
- 1.2 Safety - Spanish 9
- 1.3 Safety - French 13

2.0 Description 17
- 2.1 General 17
- 2.2 Scope 17
- 2.3 Packages Available 17
- 2.4 Specifications 18
- 2.5 Optional Accessories 19

3.0 Installation 21
- 3.1 General 21
- 3.2 Equipment Required 21
- 3.3 Location 21
- 3.4 Inspection 21
- 3.5 Primary Electrical Input Connections 22
- 3.6 Secondary Output Connections 23
- 3.7 Connecting PCM1125 for 200(208)Vac Input 25

4.0 Operation 27
- 4.1 Operation 27
- 4.2 PCM-1125 Controls 27
- 4.3 Cutting with the PT-27 28

5.0 Maintenance 31
- 5.1 General 31
- 5.2 Inspection and Cleaning 31
- 5.3 PT-27 Torch Consumable Parts 32
- 5.4 Flow Switch 33
- 5.5 1GBT Handling and Replacement 34
- 5.6 Troubleshooting 35
- 5.7 Troubleshooting Guide 36
- 5.8 Common Cutting Problems 40
- 5.9 Reference Voltage Checks 41
- 5.10 Sequence of Operation 42

6.0 Replacement Parts 45
- 6.1 General 45
- 6.2 Ordering 45

TABLE OF CONTENTS

1.0 Safety Precautions

WARNING: These Safety Precautions are for your protection. They summarize precautionary information from the references listed in Additional Safety Information section. Before performing any installation or operating procedures, be sure to read and follow the safety precautions listed below as well as all other manuals, material safety data sheets, labels, etc. Failure to observe Safety Precautions can result in injury or death.

PROTECT YOURSELF AND OTHERS -- Some welding, cutting, and gouging processes are noisy and require ear protection. The arc, like the sun, emits ultraviolet (UV) and other radiation and can injure skin and eyes. Hot metal can cause burns. Training in the proper use of the processes and equipment is essential to prevent accidents. Therefore:

1. Always wear safety glasses with side shields in any work area, even if welding helmets, face shields, and goggles are also required.
2. Use a face shield fitted with the correct filter and cover plates to protect your eyes, face, neck, and ears from sparks and rays of the arc when operating or observing operations. Warn bystanders not to watch the arc and not to expose themselves to the rays of the electric-arc or hot metal.
3. Wear flameproof gauntlet type gloves, heavy long-sleeve shirt, cuffless trousers, high-topped shoes, and a welding helmet or cap for hair protection, to protect against arc rays and hot sparks or hot metal. A flameproof apron may also be desirable as protection against radiated heat and sparks.
4. Hot sparks or metal can lodge in rolled up sleeves, trouser cuffs, or pockets. Sleeves and collars should be kept buttoned, and open pockets eliminated from the front of clothing.
5. Protect other personnel from arc rays and hot sparks with a suitable non-flammable partition or curtains.
6. Use goggles over safety glasses when chipping slag or grinding. Chipped slag may be hot and can fly far. Bystanders should also wear goggles over safety glasses.

1.1 Safety - English

FIRES AND EXPLOSIONS -- Heat from flames and arcs can start fires. Hot slag or sparks can also cause fires and explosions. Therefore:

1. Remove all combustible materials well away from the work area or cover the materials with a protective non-flammable covering. Combustible materials include wood, cloth, sawdust, liquid and gas fuels, solvents, paints and coatings, paper, etc.
2. Hot sparks or hot metal can fall through cracks or crevices in floors or wall openings and cause a hidden smoldering fire or fires on the floor below. Make certain that such openings are protected from hot sparks and metal."
3. Do not weld, cut or perform other hot work until the workpiece has been completely cleaned so that there are no substances on the workpiece which might produce flammable or toxic vapors. Do not do hot work on closed containers. They may explode.
4. Have fire extinguishing equipment handy for instant use, such as a garden hose, water pail, sand bucket, or portable fire extinguisher. Be sure you are trained in its use.
5. Do not use equipment beyond its ratings. For example, overloaded welding cable can overheat and create a fire hazard.
6. After completing operations, inspect the work area to make certain there are no hot sparks or hot metal which could cause a later fire. Use fire watchers when necessary.
7. For additional information, refer to NFPA Standard 51B, "Fire Prevention in Use of Cutting and Welding Processes", available from the National Fire Protection Association, Batterymarch Park, Quincy, MA 02269.

ELECTRICAL SHOCK -- Contact with live electrical parts and ground can cause severe injury or death. DO NOT use AC welding current in damp areas, if movement is confined, or if there is danger of falling.

1. Be sure the power source frame (chassis) is connected to the ground system of the input power.

2. Connect the workpiece to a good electrical ground.

3. Connect the work cable to the workpiece. A poor or missing connection can expose you or others to a fatal shock.

4. Use well-maintained equipment. Replace worn or damaged cables.

5. Keep everything dry, including clothing, work area, cables, torch/electrode holder, and power source.

6. Make sure that all parts of your body are insulated from work and from ground.

7. Do not stand directly on metal or the earth while working in tight quarters or a damp area; stand on dry boards or an insulating platform and wear rubber-soled shoes.

8. Put on dry, hole-free gloves before turning on the power.

9. Turn off the power before removing your gloves.

10. Refer to ANSI/ASC Standard Z49.1 (listed on next page) for specific grounding recommendations. Do not mistake the work lead for a ground cable.

ELECTRIC AND MAGNETIC FIELDS — May be dangerous. Electric current flowing through any conductor causes localized Electric and Magnetic Fields (EMF). Welding and cutting current creates EMF around welding cables and welding machines. Therefore:

1. Welders having pacemakers should consult their physician before welding. EMF may interfere with some pacemakers.

2. Exposure to EMF may have other health effects which are unknown.

3. Welders should use the following procedures to minimize exposure to EMF:

   A. Route the electrode and work cables together. Secure them with tape when possible.

   B. Never coil the torch or work cable around your body.

   C. Do not place your body between the torch and work cables. Route cables on the same side of your body.

   D. Connect the work cable to the workpiece as close as possible to the area being welded.

   E. Keep welding power source and cables as far away from your body as possible.

FUMES AND GASES -- Fumes and gases, can cause discomfort or harm, particularly in confined spaces. Do not breathe fumes and gases. Shielding gases can cause asphyxiation. Therefore:

1. Always provide adequate ventilation in the work area by natural or mechanical means. Do not weld, cut, or gouge on materials such as galvanized steel, stainless steel, copper, zinc, lead, beryllium, or cadmium unless positive mechanical ventilation is provided. Do not breathe fumes from these materials.

2. Do not operate near degreasing and spraying operations. The heat or arc rays can react with chlorinated hydrocarbon vapors to form phosgene, a highly toxic gas, and other irritant gases.

3. If you develop momentary eye, nose, or throat irritation while operating, this is an indication that ventilation is not adequate. Stop work and take necessary steps to improve ventilation in the work area. Do not continue to operate if physical discomfort persists.

4. Refer to ANSI/ASC Standard Z49.1 (see listing below) for specific ventilation recommendations.

5. WARNING: This product, when used for welding or cutting, produces fumes or gases which contain chemicals known to the State of California to cause birth defects and, in some cases, cancer. (California Health & Safety Code §25249.5 et seq.)

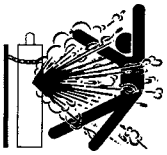

CYLINDER HANDLING -- Cylinders, if mishandled, can rupture and violently release gas. Sudden rupture of cylinder, valve, or relief device can injure or kill. Therefore:

1. Use the proper gas for the process and use the proper pressure reducing regulator designed to operate from the compressed gas cylinder. Do not use adaptors. Maintain hoses and fittings in good condition. Follow manufacturer's operating instructions for mounting regulator to a compressed gas cylinder.

2. Always secure cylinders in an upright position by chain or strap to suitable hand trucks, undercarriages, benches, walls, post, or racks. Never secure cylinders to work tables or fixtures where they may become part of an electrical circuit.

3. When not in use, keep cylinder valves closed. Have valve protection cap in place if regulator is not connected. Secure and move cylinders by using suitable hand trucks. Avoid rough handling of cylinders.

4. Locate cylinders away from heat, sparks, and flames. Never strike an arc on a cylinder.

5. For additional information, refer to CGA Standard P-1, "Precautions for Safe Handling of Compressed Gases in Cylinders", which is available from Compressed Gas Association, 1235 Jefferson Davis Highway, Arlington, VA 22202.

EQUIPMENT MAINTENANCE -- Faulty or improperly maintained equipment can cause injury or death. Therefore:

1. Always have qualified personnel perform the installation, troubleshooting, and maintenance work. Do not perform any electrical work unless you are qualified to perform such work.

2. Before performing any maintenance work inside a power source, disconnect the power source from the incoming electrical power.

3. Maintain cables, grounding wire, connections, power cord, and power supply in safe working order. Do not operate any equipment in faulty condition.

4. Do not abuse any equipment or accessories. Keep equipment away from heat sources such as furnaces, wet conditions such as water puddles, oil or grease, corrosive atmospheres and inclement weather.

5. Keep all safety devices and cabinet covers in position and in good repair.

6. Use equipment only for its intended purpose. Do not modify it in any manner.

ADDITIONAL SAFETY INFORMATION -- For more information on safe practices for electric arc welding and cutting equipment, ask your supplier for a copy of "Precautions and Safe Practices for Arc Welding, Cutting and Gouging", Form 52-529.

The following publications, which are available from the American Welding Society, 550 N.W. LeJuene Road, Miami, FL 33126, are recommended to you:

1. ANSI/ASC Z49.1 - "Safety in Welding and Cutting"

2. AWS C5.1 - "Recommended Practices for Plasma Arc Welding"

3. AWS C5.2 - "Recommended Practices for Plasma Arc Cutting"

4. AWS C5.3 - "Recommended Practices for Air Carbon Arc Gouging and Cutting"

5. AWS C5.5 - "Recommended Practices for Gas Tungsten Arc Welding“

6. AWS C5.6 - "Recommended Practices for Gas Metal Arc Welding"“

7. AWS SP - "Safe Practices" - Reprint, Welding Handbook.

8. ANSI/AWS F4.1, "Recommended Safe Practices for Welding and Cutting of Containers That Have Held Hazardous Substances."

MEANING OF SYMBOLS - As used throughout this manual: Means Attention! Be Alert! Your safety is involved.

DANGER **Means immediate hazards which, if not avoided, will result in immediate, serious personal injury or loss of life.**

WARNING **Means potential hazards which could result in personal injury or loss of life.**

CAUTION **Means hazards which could result in minor personal injury.**

1.2 Safety - Spanish

ADVERTENCIA: Estas Precauciones de Seguridad son para su protección. Ellas hacen resumen de información proveniente de las referencias listadas en la sección "Información Adicional Sobre La Seguridad". Antes de hacer cualquier instalación o procedimiento de operación , asegúrese de leer y seguir las precauciones de seguridad listadas a continuación así como también todo manual, hoja de datos de seguridad del material, calcomanias, etc. El no observar las Precauciones de Seguridad puede resultar en daño a la persona o muerte.

PROTEJASE USTED Y A LOS DEMAS-- Algunos procesos de soldadura, corte y ranurado son ruidosos y requiren protección para los oídos. El arco, como el sol , emite rayos ultravioleta (UV) y otras radiaciones que pueden dañar la piel y los ojos. El metal caliente causa quemaduras. EL entrenamiento en el uso propio de los equipos y sus procesos es esencial para prevenir accidentes. Por lo tanto:

1. Utilice gafas de seguridad con protección a los lados siempre que esté en el área de trabajo, aún cuando esté usando careta de soldar, protector para su cara u otro tipo de protección.
2. Use una careta que tenga el filtro correcto y lente para proteger sus ojos, cara, cuello, y oídos de las chispas y rayos del arco cuando se esté operando y observando las operaciones. Alerte a todas las personas cercanas de no mirar el arco y no exponerse a los rayos del arco eléctrico o el metal fundido.
3. Use guantes de cuero a prueba de fuego, camisa pesada de mangas largas, pantalón de ruedo liso, zapato alto al tobillo, y careta de soldar con capucha para el pelo, para proteger el cuerpo de los rayos y chispas calientes provenientes del metal fundido. En ocaciones un delantal a prueba de fuego es necesario para protegerse del calor radiado y las chispas.
4. Chispas y partículas de metal caliente puede alojarse en las mangas enrolladas de la camisa , el ruedo del pantalón o los bolsillos. Mangas y cuellos deberán mantenerse abotonados, bolsillos al frente de la camisa deberán ser cerrados o eliminados.
5. Proteja a otras personas de los rayos del arco y chispas calientes con una cortina adecuada no-flamable como división.
6. Use careta protectora además de sus gafas de seguridad cuando esté removiendo escoria o puliendo. La escoria puede estar caliente y desprenderse con velocidad. Personas cercanas deberán usar gafas de seguridad y careta protectora.

FUEGO Y EXPLOSIONES -- El calor de las flamas y el arco pueden ocacionar fuegos. Escoria caliente y las chispas pueden causar fuegos y explosiones. Por lo tanto:

1. Remueva todo material combustible lejos del área de trabajo o cubra los materiales con una cobija a prueba de fuego. Materiales combustibles incluyen madera, ropa, líquidos y gases flamables, solventes, pinturas, papel, etc.
2. Chispas y partículas de metal pueden introducirse en las grietas y agujeros de pisos y paredes causando fuegos escondidos en otros niveles o espacios. Asegúrese de que toda grieta y agujero esté cubierto para proteger lugares adyacentes contra fuegos.
3. No corte, suelde o haga cualquier otro trabajo relacionado hasta que la pieza de trabajo esté totalmente limpia y libre de substancias que puedan producir gases inflamables o vapores tóxicos. No trabaje dentro o fuera de contenedores o tanques cerrados. Estos pueden explotar si contienen vapores inflamables.
4. Tenga siempre a la mano equipo extintor de fuego para uso instantáneo, como por ejemplo una manguera con agua, cubeta con agua, cubeta con arena, o extintor portátil. Asegúrese que usted esta entrenado para su uso.
5. No use el equipo fuera de su rango de operación. Por ejemplo, el calor causado por cable sobrecarga en los cables de soldar pueden ocasionar un fuego.
6. Después de termirar la operación del equipo, inspeccione el área de trabajo para cerciorarse de que las chispas o metal caliente ocasionen un fuego más tarde. Tenga personal asignado para vigilar si es necesario.
7. Para información adicional , haga referencia a la publicación NFPA Standard 51B, "Fire Prevention in Use of Cutting and Welding Processes", disponible a través de la National Fire Protection Association, Batterymarch Park, Quincy, MA 02269.

CHOQUE ELECTRICO -- El contacto con las partes eléctricas energizadas y tierra puede causar daño severo o muerte. NO use soldadura de corriente alterna (AC) en áreas húmedas, de movimiento confinado en lugares estrechos o si hay posibilidad de caer al suelo.

1. Asegúrese de que el chasis de la fuente de poder esté conectado a tierra através del sistema de electricidad primario.
2. Conecte la pieza de trabajo a un buen sistema de tierra física.
3. Conecte el cable de retorno a la pieza de trabajo. Cables y conductores expuestos o con malas conexiones pueden exponer al operador u otras personas a un choque eléctrico fatal.
4. Use el equipo solamente si está en buenas condiciones. Reemplaze cables rotos, dañados o con conductores expuestos.
5. Mantenga todo seco, incluyendo su ropa, el área de trabajo, los cables, antorchas, pinza del electrodo, y la fuente de poder.
6. Asegúrese que todas las partes de su cuerpo están insuladas de ambos, la pieza de trabajo y tierra.
7. No se pare directamente sobre metal o tierra mientras trabaja en lugares estrechos o áreas húmedas; trabaje sobre un pedazo de madera seco o una plataforma insulada y use zapatos con suela de goma.
8. Use guantes secos y sin agujeros antes de energizar el equipo.
9. Apage el equipo antes de quitarse sus guantes.
10. Use como referencia la publicación ANSI/ASC Standard Z49.1 (listado en la próxima página) para recomendaciones específicas de como conectar el equipo a tierra. No confunda el cable de soldar a la pieza de trabajo con el cable a tierra.

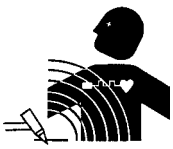

CAMPOS ELECTRICOS Y MAGNETICOS - Son peligrosos. La corriente eléctrica fluye através de cualquier conductor causando a nivel local Campos Eléctricos y Magnéticos (EMF). Las corrientes en el área de corte y soldadura, crean EMF alrrededor de los cables de soldar y las maquinas. Por lo tanto:

1. Soldadores u Operadores que use marca-pasos para el corazón deberán consultar a su médico antes de soldar. El Campo Electromagnético (EMF) puede interferir con algunos marca-pasos.

2. Exponerse a campos electromagnéticos (EMF) puede causar otros efectos de salud aún desconocidos.

3. Los soldadores deberán usar los siguientes procedimientos para minimizar exponerse al EMF:

   A. Mantenga el electrodo y el cable a la pieza de trabajo juntos, hasta llegar a la pieza que usted quiere soldar. Asegúrelos uno junto al otro con cinta adhesiva cuando sea posible.
   B. Nunca envuelva los cables de soldar alrededor de su cuerpo.
   C. Nunca ubique su cuerpo entre la antorcha y el cable, a la pieza de trabajo. Mantega los cables a un sólo lado de su cuerpo.
   D. Conecte el cable de trabajo a la pieza de trabajo lo más cercano posible al área de la soldadura.
   E. Mantenga la fuente de poder y los cables de soldar lo más lejos posible de su cuerpo.

HUMO Y GASES -- El humo y los gases, pueden causar malestar o daño, particularmente en espacios sin ventilación. No inhale el humo o gases. El gas de protección puede causar falta de oxígeno.
Por lo tanto:

1. Siempre provea ventilación adecuada en el área de trabajo por medio natural o mecánico. No solde, corte, o ranure materiales con hierro galvanizado, acero inoxidable, cobre, zinc, plomo, berílio, o cadmio a menos que provea ventilación mecánica positiva . No respire los gases producidos por estos materiales.
2. No opere cerca de lugares donde se aplique substancias químicas en aerosol. El calor de los rayos del arco pueden reaccionar con los vapores de hidrocarburo clorinado para formar un fosfógeno, o gas tóxico, y otros irritant es.
3. Si momentáneamente desarrolla inrritación de ojos, nariz o garganta mientras est á operando, es indicación de que la ventilación no es apropiada. Pare de trabajar y tome las medidas necesarias para mejorar la ventilación en el área de trabajo. No continúe operando si el malestar físico persiste.
4. Haga referencia a la publicación ANSI/ASC Standard Z49.1 (Vea la lista a continuación) para recomendaciones específicas en la ventilación.

5. ADVERTENCIA-- Este producto cuando se utiliza para soldaduras o cortes, produce humos o gases, los cuales contienen químicos conocidos por el Estado de California de causar defectos en el nacimiento, o en algunos casos, Cancer. (California Health & Safety Code §25249.5 et seq.)

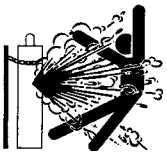

MANEJO DE CILINDROS-- Los cilindros, si no son manejados correctamente, pueden romperse y liberar violentamente gases. Rotura repentina del cilindro, válvula, o válvula de escape puede causar daño o muerte. Por lo tanto:

1. Utilize el gas apropiado para el proceso y utilize un regulador diseñado para operar y reducir la presión del cilindro de gas . No utilice adaptadores. Mantenga las mangueras y las conexiones en buenas condiciones. Observe las instrucciones de operación del manufacturero para montar el regulador en el cilindro de gas comprimido.

2. Asegure siempre los cilindros en posición vertical y amárrelos con una correa o cadena adecuada para asegurar el cilindro al carro, transportes, tablilleros, paredes, postes, o armazón. Nunca asegure los cilindros a la mesa de trabajo o las piezas que son parte del circuito de soldadura . Este puede ser parte del circuito elélectrico.

3. Cuando el cilindro no está en uso, mantenga la válvula del cilindro cerrada. Ponga el capote de protección sobre la válvula si el regulador no está conectado. Asegure y mueva los cilindros utilizando un carro o transporte adecuado. Evite el manejo brusco de los

MANTENIMIENTO DEL EQUIPO -- Equipo defectuoso o mal mantenido puede causar daño o muerte. Por lo tanto:

1. Siempre tenga personal cualificado para efectuar l a instalación, diagnóstico, y mantenimiento del equipo. No ejecute ningún trabajo eléctrico a menos que usted esté cualificado para hacer el trabajo.
2. Antes de dar mantenimiento en el interior de la fuente de poder, desconecte la fuente de poder del suministro de electricidad primaria.
3. Mantenga los cables, cable a tierra, conexciones, cable primario, y cualquier otra fuente de poder en buen estado operacional. No opere ningún equipo en malas condiciones.
4. No abuse del equipo y sus accesorios. Mantenga el equipo lejos de cosas que generen calor como hornos, también lugares húmedos como charcos de agua , aceite o grasa, atmósferas corrosivas y las inclemencias del tiempo.
5. Mantenga todos los artículos de seguridad y coverturas del equipo en su posición y en buenas condiciones.
6. Use el equipo sólo para el propósito que fue diseñado. No modifique el equipo en ninguna manera.

INFORMACION ADICIONAL DE SEGURIDAD -- Para más información sobre las prácticas de seguridad de los equipos de arco eléctrico para soldar y cortar, pregunte a su suplidor por una copia de "Precautions and Safe Practices for Arc Welding, Cutting and Gouging-Form 52-529.

Las siguientes publicaciones, disponibles através de la American Welding Society, 550 N.W. LeJuene Road, Miami, FL 33126, son recomendadas para usted:

1. ANSI/ASC Z49.1 - "Safety in Welding and Cutting"

2. AWS C5.1 - "Recommended Practices for Plasma Arc Welding"

3. AWS C5.2 - "Recommended Practices for Plasma Arc Cutting"

4. AWS C5.3 - "Recommended Practices for Air Carbon Arc Gouging and Cutting"

SIGNIFICADO DE LOS SIMBOLOS -- Según usted avanza en la lectura de este folleto: Los Símbolos Significan ¡Atención! ¡Esté Alerta! Se trata de su seguridad.

PELIGRO **Significa riesgo inmediato que, de no ser evadido, puede resultar inmediatamente en serio daño personal o la muerte.**

ADVERTENCIA **Significa el riesgo de un peligro potencial que puede resultar en serio daño personal o la muerte.**

CUIDADO **Significa el posible riesgo que puede resultar en menores daños a la persona.**

1.3 Safety - French

AVERTISSEMENT : Ces règles de sécurité ont pour but d'assurer votre protection. Ils récapitulent les informations de précaution provenant des références dans la section des Informations de sécurité supplémentaires. Avant de procéder à l'installation ou d'utiliser l'unité, assurez-vous de lire et de suivre les précautions de sécurité ci-dessous, dans les manuels, les fiches d'information sur la sécurité du matériel et sur les étiquettes, etc. Tout défaut d'observer ces précautions de sécurité peut entraîner des blessures graves ou mortelles.

PROTÉGEZ-VOUS -- Les processus de soudage, de coupage et de gougeage produisent un niveau de bruit élevé et exige l'emploi d'une protection auditive. L'arc, tout comme le soleil, émet des rayons ultraviolets en plus d'autre rayons qui peuvent causer des blessures à la peau et les yeux. Le métal incandescent peut causer des brûlures. Une formation reliée à l'usage des processus et de l'équipement est essentielle pour prévenir les accidents. Par conséquent:

1. Portez des lunettes protectrices munies d'écrans latéraux lorsque vous êtes dans l'aire de travail, même si vous devez porter un casque de soudeur, un écran facial ou des lunettes étanches.
2. Portez un écran facial muni de verres filtrants et de plaques protectrices appropriées afin de protéger vos yeux, votre visage, votre cou et vos oreilles des étincelles et des rayons de l'arc lors d'une opération ou lorsque vous observez une opération. Avertissez les personnes se trouvant à proximité de ne pas regarder l'arc et de ne pas s'exposer aux rayons de l'arc électrique ou le métal incandescent.
3. Portez des gants ignifugiés à crispin, une chemise épaisse à manches longues, des pantalons sans rebord et des chaussures montantes afin de vous protéger des rayons de l'arc, des étincelles et du métal incandescent, en plus d'un casque de soudeur ou casquette pour protéger vos cheveux. Il est également recommandé de porter un tablier ininflammable afin de vous protéger des étincelles et de la chaleur par rayonnement.
4. Les étincelles et les projections de métal incandescent risquent de se loger dans les manches retroussées, les rebords de pantalons ou les poches. Il est recommandé de garder boutonnés le col et les manches et de porter des vêtements sans poches en avant.
5. Protégez toute personne se trouvant à proximité des étincelles et des rayons de l'arc à l'aide d'un rideau ou d'une cloison ininflammable.
6. Portez des lunettes étanches par dessus vos lunettes de sécurité lors des opérations d'écaillage ou de meulage du laitier. Les écailles de laitier incandescent peuvent être projetées à des distances considérables. Les personnes se trouvant à proximité doivent également porter des lunettes étanches par dessus leur lunettes de sécurité.

INCENDIES ET EXPLOSIONS -- La chaleur provenant des flammes ou de l'arc peut provoquer un incendie. Le laitier incandescent ou les étincelles peuvent également provoquer un incendie ou une explosion. Par conséquent :

1. Éloignez suffisamment tous les matériaux combustibles de l'aire de travail et recouvrez les matériaux avec un revêtement protecteur ininflammable. Les matériaux combustibles incluent le bois, les vêtements, la sciure, le gaz et les liquides combustibles, les solvants, les peintures et les revêtements, le papier, etc.
2. Les étincelles et les projections de métal incandescent peuvent tomber dans les fissures dans les planchers ou dans les ouvertures des murs et déclencher un incendie couvant à l'étage inférieur Assurez-vous que ces ouvertures sont bien protégées des étincelles et du métal incandescent.
3. N'exécutez pas de soudure, de coupe ou autre travail à chaud avant d'avoir complètement nettoyé la surface de la pièce à traiter de façon à ce qu'il n'ait aucune substance présente qui pourrait produire des vapeurs inflammables ou toxiques. N'exécutez pas de travail à chaud sur des contenants fermés car ces derniers pourraient exploser.
4. Assurez-vous qu'un équipement d'extinction d'incendie est disponible et prêt à servir, tel qu'un tuyau d'arrosage, un seau d'eau, un seau de sable ou un extincteur portatif. Assurez-vous d'être bien instruit par rapport à l'usage de cet équipement.
5. Assurez-vous de ne pas excéder la capacité de l'équipement. Par exemple, un câble de soudage surchargé peut surchauffer et provoquer un incendie.
6. Une fois les opérations terminées, inspectez l'aire de travail pour assurer qu'aucune étincelle ou projection de métal incandescent ne risque de provoquer un incendie ultérieurement. Employez des guetteurs d'incendie au besoin.
7. Pour obtenir des informations supplémentaires, consultez le NFPA Standard 51B, "Fire Prevention in Use of Cutting and Welding Processes", disponible au National Fire Protection Association, Batterymarch Park, Quincy, MA 02269.

CHOC ÉLECTRIQUE -- Le contact avec des pièces électriques ou les pièces de mise à la terre sous tension peut causer des blessures graves ou mortelles. NE PAS utiliser un courant de soudage c.a. dans un endroit humide, en espace restreint ou si un danger de chute se pose.

1. Assurez-vous que le châssis de la source d'alimentation est branché au système de mise à la terre de l'alimentation d'entrée.
2. Branchez la pièce à traiter à une bonne mise de terre électrique.
3. Branchez le câble de masse à la pièce à traiter et assurez une bonne connexion afin d'éviter le risque de choc électrique mortel.
4. Utilisez toujours un équipement correctement entretenu. Remplacez les câbles usés ou endommagés.
5. Veillez à garder votre environnement sec, incluant les vêtements, l'aire de travail, les câbles, le porte-électrode/torche et la source d'alimentation.
6. Assurez-vous que tout votre corps est bien isolé de la pièce à traiter et des pièces de la mise à la terre.
7. Si vous devez effectuer votre travail dans un espace restreint ou humide, ne tenez vous pas directement sur le métal ou sur la terre; tenez-vous sur des planches sèches ou une plate-forme isolée et portez des chaussures à semelles de caoutchouc.
8. Avant de mettre l'équipement sous tension, isolez vos mains avec des gants secs et sans trous.
9. Mettez l'équipement hors tension avant d'enlever vos gants.
10. Consultez ANSI/ASC Standard Z49.1 (listé à la page suivante) pour des recommandations spécifiques concernant les procédures de mise à la terre. Ne pas confondre le câble de masse avec le câble de mise à la terre.

CHAMPS ÉLECTRIQUES ET MAGNÉTIQUES — comportent un risque de danger. Le courant électrique qui passe dans n'importe quel conducteur produit des champs électriques et magnétiques localisés. Le soudage et le courant de coupage créent des champs électriques et magnétiques autour des câbles de soudage et l'équipement. Par conséquent :

1. Un soudeur ayant un stimulateur cardiaque doit consulter son médecin avant d'entreprendre une opération de soudage. Les champs électriques et magnétiques peuvent causer des ennuis pour certains stimulateurs cardiaques.
2. L'exposition à des champs électriques et magnétiques peut avoir des effets néfastes inconnus pour la santé.
3. Les soudeurs doivent suivre les procédures suivantes pour minimiser l'exposition aux champs électriques et magnétiques :
   A. Acheminez l'électrode et les câbles de masse ensemble. Fixez-les à l'aide d'une bande adhésive lorsque possible.
   B. Ne jamais enrouler la torche ou le câble de masse autour de votre corps.
   C. Ne jamais vous placer entre la torche et les câbles de masse. Acheminez tous les câbles sur le même côté de votre corps.
   D. Branchez le câble de masse à la pièce à traiter le plus près possible de la section à souder.
   E. Veillez à garder la source d'alimentation pour le soudage et les câbles à une distance appropriée de votre corps.

LES VAPEURS ET LES GAZ -- peuvent causer un malaise ou des dommages corporels, plus particulièrement dans les espaces restreints. Ne respirez pas les vapeurs et les gaz. Le gaz de protection risque de causer l'asphyxie. Par conséquent :

1. Assurez en permanence une ventilation adéquate dans l'aire de travail en maintenant une ventilation naturelle ou à l'aide de moyens mécanique. N'effectuez jamais de travaux de soudage, de coupage ou de gougeage sur des matériaux tels que l'acier galvanisé, l'acier inoxydable, le cuivre, le zinc, le plomb, le berylliym ou le cadmium en l'absence de moyens mécaniques de ventilation efficaces. Ne respirez pas les vapeurs de ces matériaux.
2. N'effectuez jamais de travaux à proximité d'une opération de dégraissage ou de pulvérisation. Lorsque la chaleur
   ou le rayonnement de l'arc entre en contact avec les vapeurs d'hydrocarbure chloré, ceci peut déclencher la formation de phosgène ou d'autres gaz irritants, tous extrêmement toxiques.
3. Une irritation momentanée des yeux, du nez ou de la gorge au cours d'une opération indique que la ventilation n'est pas adéquate. Cessez votre travail afin de prendre les mesures nécessaires pour améliorer la ventilation dans l'aire de travail. Ne poursuivez pas l'opération si le malaise persiste.
4. Consultez ANSI/ASC Standard Z49.1 (à la page suivante) pour des recommandations spécifiques concernant la ventilation.

5. AVERTISSEMENT : Ce produit, lorsqu'il est utilisé dans une opération de soudage ou de coupage, dégage des vapeurs ou des gaz contenant des chimiques considéres par l'état de la Californie comme étant une cause des malformations congénitales et dans certains cas, du cancer. (California Health & Safety Code §25249.5 et seq.)

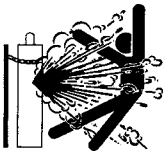

MANIPULATION DES CYLINDRES -- La manipulation d'un cylindre, sans observer les précautions nécessaires, peut produire des fissures et un échappement dangereux des gaz. Une brisure soudaine du cylindre, de la soupape ou du dispositif de surpression peut causer des blessures graves ou mortelles. Par conséquent :

1. Utilisez toujours le gaz prévu pour une opération et le détendeur approprié conçu pour utilisation sur les cylindres de gaz comprimé. N'utilisez jamais d'adaptateur. Maintenez en bon état les tuyaux et les raccords. Observez les instructions d'opération du fabricant pour assembler le détendeur sur un cylindre de gaz comprimé.
2. Fixez les cylindres dans une position verticale, à l'aide d'une chaîne ou une sangle, sur un chariot manuel, un châssis de roulement, un banc, un mur, une colonne ou un support convenable. Ne fixez jamais un cylindre à un poste de travail ou toute autre dispositif faisant partie d'un circuit électrique.
3. Lorsque les cylindres ne servent pas, gardez les soupapes fermées. Si le détendeur n'est pas branché, assurez-vous que le bouchon de protection de la soupape est bien en place. Fixez et déplacez les cylindres à l'aide d'un chariot manuel approprié. Toujours manipuler les cylindres avec soin.
4. Placez les cylindres à une distance appropriée de toute source de chaleur, des étincelles et des flammes. Ne jamais amorcer l'arc sur un cylindre.
5. Pour de l'information supplémentaire, consultez CGA Standard P-1, "Precautions for Safe Handling of Compressed Gases in Cylinders", mis à votre disposition par le Compressed Gas Association, 1235 Jefferson Davis Highway, Arlington, VA 22202.

ENTRETIEN DE L'ÉQUIPEMENT -- Un équipement entretenu de façon défectueuse ou inadéquate peut causer des blessures graves ou mortelles. Par conséquent :

1. Efforcez-vous de toujours confier les tâches d'installation, de dépannage et d'entretien à un personnel qualifié. N'effectuez aucune réparation électrique à moins d'être qualifié à cet effet.
2. Avant de procéder à une tâche d'entretien à l'intérieur de la source d'alimentation, débranchez l'alimentation électrique.
3. Maintenez les câbles, les fils de mise à la terre, les branchements, le cordon d'alimentation et la source d'alimentation en bon état. N'utilisez jamais un équipement s'il présente une défectuosité quelconque.
4. N'utilisez pas l'équipement de façon abusive. Gardez l'équipement à l'écart de toute source de chaleur, notamment des fours, de l'humidité, des flaques d'eau, de l'huile ou de la graisse, des atmosphères corrosives et des intempéries.
5. Laissez en place tous les dispositifs de sécurité et tous les panneaux de la console et maintenez-les en bon état.
6. Utilisez l'équipement conformément à son usage prévu et n'effectuez aucune modification.

INFORMATIONS SUPPLÉMENTAIRES RELATIVES À LA SÉCURITÉ -- Pour obtenir de l'information supplémentaire sur les règles de sécurité à observer pour l'équipement de soudage à l'arc électrique et le coupage, demandez un exemplaire du livret "Precautions and Safe Practices for Arc Welding, Cutting and Gouging", Form 52-529.

Les publications suivantes sont également recommandées et mises à votre disposition par l'American Welding Society, 550 N.W. LeJuene Road, Miami, FL 33126 :

1. ANSI/ASC Z49.1 - "Safety in Welding and Cutting"
2. AWS C5.1 - "Recommended Practices for Plasma Arc Welding"
3. AWS C5.2 - "Recommended Practices for Plasma Arc Cutting"
4. AWS C5.3 - "Recommended Practices for Air Carbon Arc Gouging and Cutting"

SIGNIFICATION DES SYMBOLES

Ce symbole, utilisé partout dans ce manuel, signifie "Attention" ! Soyez vigilant ! Votre sécurité est en jeu.

DANGER

Signifie un danger immédiat. La situation peut entraîner des blessures graves ou mortelles.

AVERTISSEMENT

Signifie un danger potentiel qui peut entraîner des blessures graves ou mortelles.

ATTENTION

Signifie un danger qui peut entraîner des blessures corporelles mineures.

2.1 GENERAL

The PCM-1125 is a compact, completely self-contained plasma cutting system. As shipped, the system is fully assembled and ready to cut after being connected to input power and a source of compressed air (90-150 psi). The PCM-1125 package uses the heavy-duty PT-27 torch to deliver cutting power for severing materials up to 1-1/4 inch thick. Refer to the following paragraphs for descriptions of the PCM-1125 packages available as well as performance specifications.

WARNING **Use only ESAB Plasmarc torches that are designed for use with this console. Use of torches not designed for use with this console could create an ELECTRIC SHOCK HAZARD. Do NOT use or modify the PT-23, PCT-80 or any other torch for use on this console.**

2.2 SCOPE

The purpose of this manual is to provide the operator with all the information required to install and operate the PCM-1125 plasma arc cutting package. Technical reference material is also provided to assist in troubleshooting the cutting package.

2.3 PACKAGES AVAILABLE

PCM-1125 listed on the front cover includes the following components:

PT-27 Torch, 75° head, 25-ft. ..... P/N 21661
PT-27 Spare Parts Kit (see Table 1-1) ..... P/N 21623
PCM-1125 Console/Power Source ..... See below

Depending on the choice of input power, each package includes the following appropriate PCM-1125 Console/Power Source:

208/230 V, 50/60 Hz, 1 or 3-phase ..... P/N 0558001248
460 V, 50/60 Hz, 3-phase ..... P/N 0558001249
575 V, 60 Hz, 3-phase ..... P/N 0558001250
400 V, 50/60 Hz, 3-phase ..... P/N 0558002989

Table 2-1. PT-27 Spare Parts Kit, P/N 21623, Contents

Description	Part Number	Quantity
50 - 60 A Nozzle	33369	4
Electrode	33366	3
Swirl Baffle	33367	1
Heat Shield	21616	2
Standoff Guide	21420	1
Fuse, 15 A, 600 VDC, Fast Acting	952137	1

2.4 SPECIFICATIONS

Table 2-2. PowerCut-1125 Specifications

Rated Inputs				Rated Outputs			
Phases	Volts	Amps	Power Factor	*Duty Cycle	Output Amps @ 120V DC	Open Circuit Voltage	Efficiency
One	208	64 55	73%	#70% #100%	70 60	280V DC 280V DC	86%
	230	58 55	73%	#90% #100%	70 66	270V DC 270V DC	86%
Three	208	28	93%	100%	70	285V DC	89%
	230	25	93%	100%	70	275V DC	89%
	400	16	88%	100%	70	285V DC	89%
	460	14	88%	100%	70	275V DC	89%
	575	11	87%	100%	70	260V DC	89%

*Duty cycle is based on a 10-minute period; therefore, a 70% duty cycle means the power source may operate for 7 minutes with a cool down period of 3 minutes. 100% duty cycle means the power source may operate continuously.

Duty cycle at 70A output is limited by the factory supplied 6 AWG, 4 conductor input cable having a current rating of 55A. To obtain 100% duty capability at 70A output, change the input cable to 4 AWG, 3 conductor (or 4 AWG, 2 conductor with ground).

Current Capacity	PT-27	80 A DCSP
Air Requirements	PT-27	320 cfh @ 65 - 75 psig (150 l/min @ 4.5 - 5.2 bars)
Dimensions	Length	20.3" (516 mm)
	Height w/handles	16.1" (409 mm) 18.3" (465 mm)
	Width w/o opt. storage w/ opt. torch storage	 10.1" (275 mm) 13.1" (333 mm)
Weight of PowerCut-1125 System		87 lbs (39.5 kg)
Shipping Weight		102 lbs (46.4 kg)

Table 2-3. PT-27 Torch Specifications

Current Capacity (100% duty)	80 A DCSP
Length of Service Lines	25 ft or 50 ft
Weight	
25 ft	5.2 lbs (2.4 kg)
50 ft	9.6 lbs (4.4 kg)

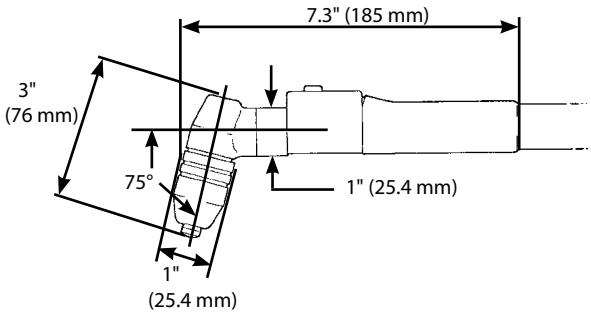

Figure 2-1. PT-27 Dimensions

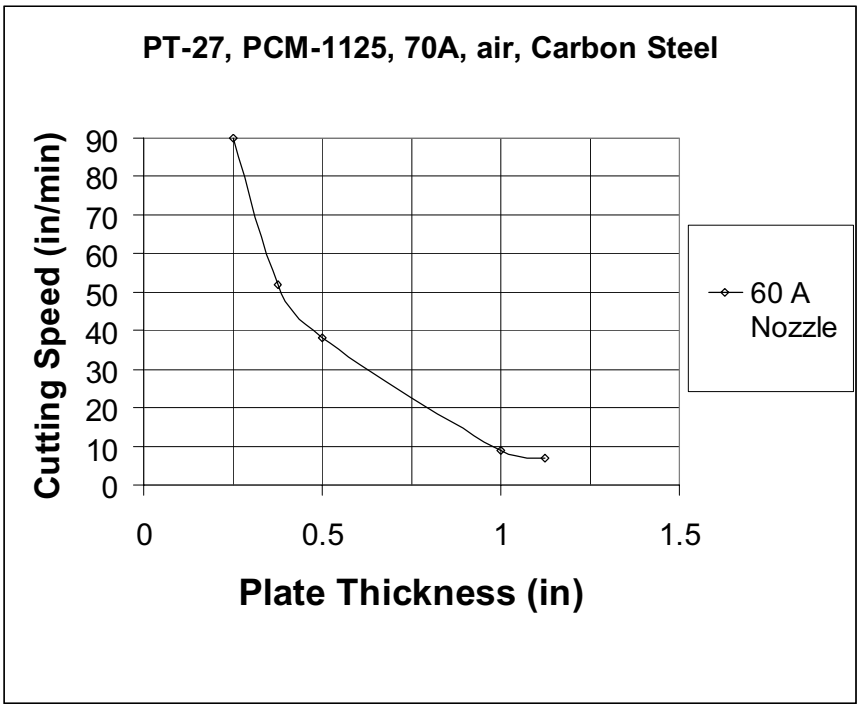

Figure 2-2. PT-27/PCM-1125 Cutting Performance

2.5 OPTIONAL ACCESSORIES

1. **Torch Wrap/Spare Parts Kit Holder, P/N 33952GY.** Units have 4 mounting holes on left side for mounting this accessory holder.

2. **Wheel Cart, P/N 34324.** This 5 7/8" high cart has front swivel casters and rear casters to make it easier to roll the PCM-1125 around the job site.

3.1 GENERAL

Proper installation is important for satisfactory and trouble-free operation of the PCM-1125 cutting package. It is suggested that each step in this section be studied carefully and followed closely.

3.2 EQUIPMENT REQUIRED

A source of clean, dry air that supplies 320 cfh at 65-75 psig is required for the cutting operation. The air supply should not exceed 150 psig (the maximum inlet pressure rating of the air filter-regulator supplied with the package).

3.3 LOCATION

Adequate ventilation is necessary to provide proper cooling of the PCM-1125. The amount of dirt, dust, and excessive heat to which the equipment is exposed, should be minimized. There should be at least one foot of clearance between the PCM-1125 power source and wall or any other obstruction to allow freedom of air movement through the power source.

WARNING **Installing or placing any type of filtering device will restrict the volume of intake air, thereby subjecting the power source internal components to overheating. The warranty is void if any type of filter device is used.**

3.4 INSPECTION

A. Remove the shipping container and all packing material and inspect for evidence of concealed damage which may not have been apparent upon receipt of the PCM-1125. Notify the carrier of any defects or damage at once.

B. Check container for any loose parts prior to disposing of shipping materials.

C. Check air louvers and any other openings to ensure that any obstruction is removed.

3.5 PRIMARY ELECTRICAL INPUT CONNECTIONS (FIGURE 3-1)

WARNING **ELECTRIC SHOCK CAN KILL! Precautionary measures should be taken to provide maximum protection against electrical shock. Be sure that all power is off by opening the line (wall) disconnect switch and by unplugging the power cord to the unit when connections are made inside of the power source.**

CAUTION **Be sure that the power source is properly configured for your input power supply. DO NOT connect a power source configured for 208/230 V to a 460 V input power supply. Damage to the machine may occur.**

NOTE: If using 208 V input power, the PCM-1125 must be reconnected for 208 V use as directed in Section 3.7 and Fig. 3-2.

The PCM-1125 consoles are equipped with a 10-ft, 4-conductor input power cable for 3-phase connection. If single-phase connection is desired, tape back the red wire on the input power cable.

NOTE: The 208/230 V models are equipped with a plug for single-phase connection only. The plug is mounted to a 4-conductor cable. If 3-phase connection is desired, remove and discard the plug and proceed as described above.

A line (wall) disconnect switch with fuses or circuit breakers should be provided at the main power panel (see Fig. 3-1 and Table 3-1 for fuse sizes). The input power cable of the console may be connected directly to the disconnect switch or you may purchase a proper plug and receptacle from a local electrical supplier. If using plug/receptacle combination, see Table 3-1 for recommended input conductors for connecting receptacle to line disconnect switch.

WARNING **The chassis must be connected to an approved electrical ground. Failure to do so may result in electrical shock, severe burns or death.**

Table 3-1. Recommended Sizes For Input Conductors and Line Fuses

Input Requirements			Input & Gnd	Fuse
Volts	Phase	Amps	Conductor CU/AWG	Size Amps
208	1	64	4	90
208	3	28	10	50
230	1	58	4	90
230	3	25	10	40
400	3	16	10	25
460	3	14	10	25
575	3	11	10	20

3.6 SECONDARY (OUTPUT) CONNECTIONS (REFER TO FIG. 3-1)

WARNING

Before making any connections to the power source output terminals, make sure that all primary input power to the power source is deenergized (off) at the main disconnect switch and that the input power cable is unplugged.

1. For operator safety, the torch connections are located on the output terminal board behind the lower portion of the front panel. Remove access door to output terminal board from right panel of power source.
2. Thread the power cable, pilot arc cable and switch lead of the PT-27 through the right open bushing of the front panel. Connect power cable to the torch fitting (left-hand threads); bolt the pilot arc cable ring connection to the copper terminal; and plug in the switch lead to the torch switch receptable on the output terminal board. Make sure the power and pilot arc cable connections are wrench-tight. Make sure plug of switch lead is firmly locked in place.
3. Reassemble the access door to the power source.
4. Connect your air supply to the inlet connection of the filter-regulator.
5. Clamp the work cable to the workpiece. Be sure the workpiece is connected to an approved earth ground with a properly sized ground cable.

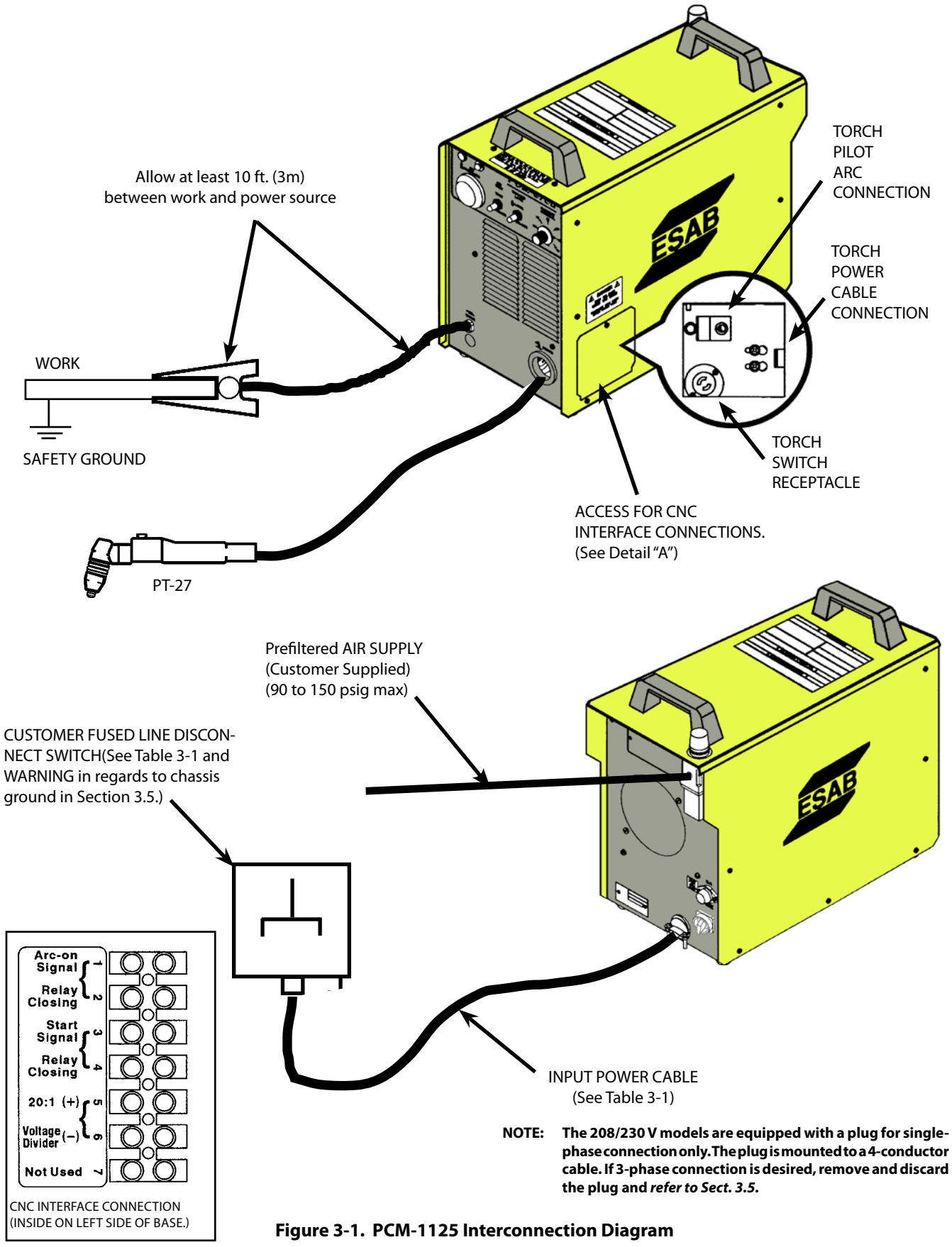

NOTE: **The 208/230 V models are equipped with a plug for single-phase connection only. The plug is mounted to a 4-conductor cable. If 3-phase connection is desired, remove and discard the plug and *refer to Sect. 3.5.***

DETAIL "A"

Figure 3-1. PCM-1125 Interconnection Diagram

3.7 CONNECTING PCM-1125 FOR 208 VAC INPUT

WARNING **ELECTRIC SHOCK CAN KILL! Precautionary measures should be taken to provide maximum protection against electrical shock. Be sure that all power is off by opening the line (wall) disconnect switch and by unplugging the power cord to the unit when reconnecting for 208 VAC Input.**

The PCM-1125 (P/N 0558001248) power source with 208/230 vac, 1-phase input capability is factory set for 230 vac input. If using 208 vac input, the PCM-1125 must be reconnected as follows before connecting to your input power:

1. Remove cover from the PCM-1125 power source.
2. Locate the Input Bridge (IBR) and TB5 terminal block (see Fig. 3-2a) on the left side towards the rear panel. Disconnect the gray lead from TB5-2 and then connect it to TB5-1.
3. Locate the output bridge (D2) on left side towards the front panel (see Fig. 3-2b). Disconnect and interchange leads X2 and X3 from the main transformer. For 208 vac input, X2 is connected to TB3 and X3 is connected to terminal 3 of D2. Make sure the connections are firmly tightened.
4. Leave all other wires the same.
5. Reinstall cover and connect the PCM-1125 to 208 vac input power.

Note: Factory set for 230 VAC input.
For 208VAC move Gry wire from TB5-2 to TB5-1, move T1-X2 to TB3 and T1-X3 to D2-3

Fig. 3-2a **Fig. 3-2b**

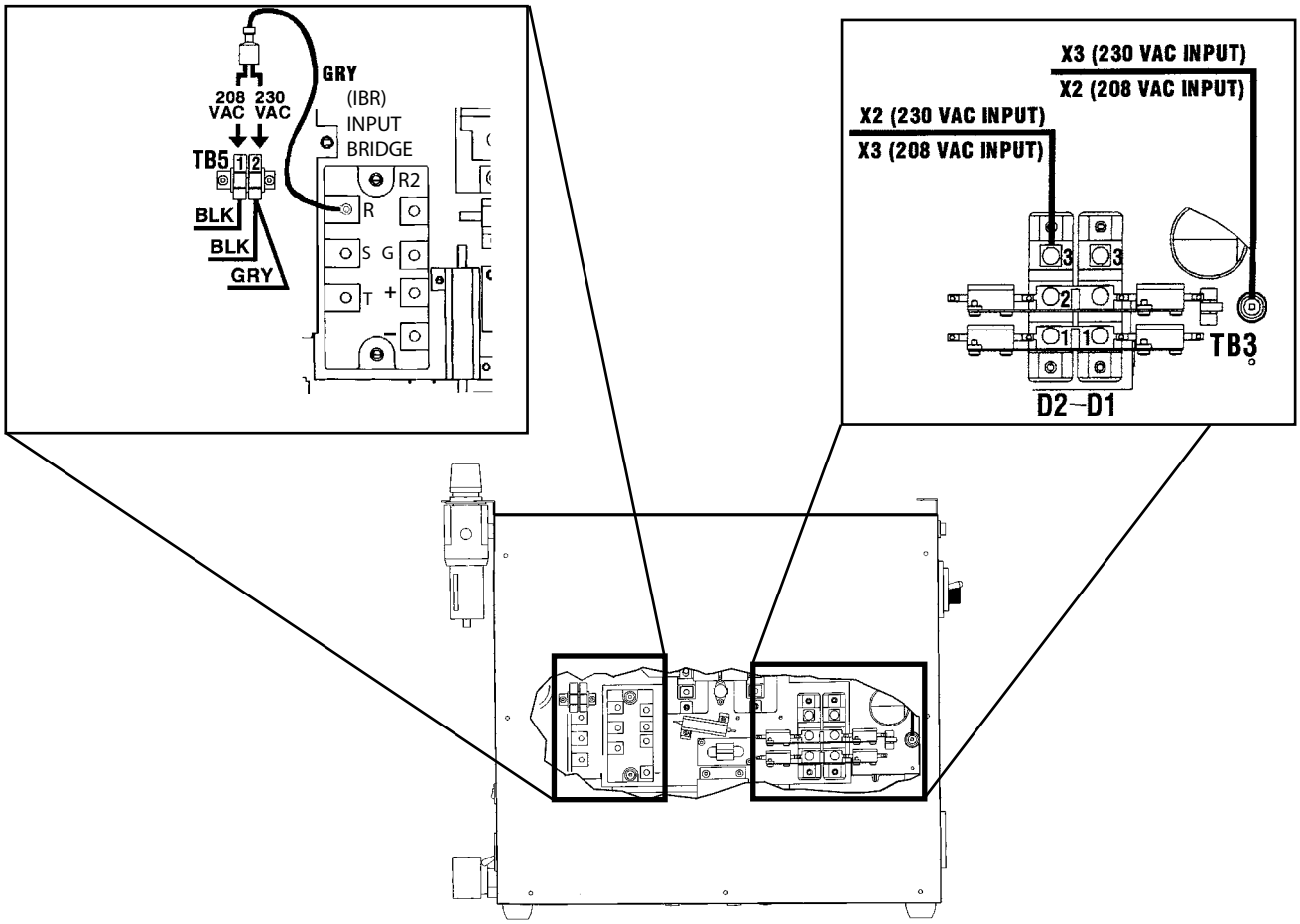

Figure 3-2. Original Factory Setup for 230 Vac Input on Power Source with 208/230 Vac Input Power Capability

4.1 OPERATION

WARNING

ELECTRIC SHOCK can kill.
- **Do NOT operate the unit with the cover removed.**
- **Do NOT apply power to the unit while holding or carrying the unit.**
- **Do NOT touch any torch parts forward of the torch handle (nozzle, heat shield, electrode, etc.) with power switch on.**

WARNING

ARC RAYS can burn eyes and skin; NOISE can damage hearing.
- **Wear welding helmet with No. 6 or 7 lens shade.**
- **Wear eye, ear, and body protection.**

CAUTION

Position the PCM-1125 at least 10 feet (3 meters) from the cutting area. Sparks and hot slag from the cutting operation can damage the unit.

4.2 PCM-1125 CONTROLS (FIGURE 4-1)

A. **Power Switch (located on rear panel).** When placed in ON position, the green pilot light will glow indicating control circuit is energized and the cooling fan will run.

B. **Output Current Control.** Adjustable from 10 to 70 amperes.

C. **Air Test Switch.** When placed in Test position, air filter-regulator can be adjusted to desired pressure (65-75 psig) before cutting operations. Allow air to flow for a few minutes. This should remove any condensation that may have accumulated during shutdown period. Be sure to place switch in OPERATE position before starting cutting operations.

D. **Trigger Lock Switch.** When placed in LOCK position, this permits releasing torch switch button after cutting arc has been initiated. To extinguish arc at end of cut, press and release torch switch button again or pull torch away from work. When placed in UNLOCK position, torch switch must be held closed by the operator during the entire cutting operation and then released at the end of cut.

E. **Fault Light.** Will glow amber under the following conditions and operations will come to a complete stop.

Flow Fault: The fault light will be **mostly on** but will flick off for about 1/10th of a second every second. This indicates that the air flow supply is low.

Over Temperature: The fault light will be **mostly off** but will flick on for about 1/10th of a second every second. This indicates that the duty cycle has been exceeded. Allow the power source to cool down before returning to operate.

High/Low Line Voltage: The fault light will **rapidly blink on and off** (five times per second). This indicates that the input voltage is outside the "+ or -" 15% range of the input rating.

Over-Current: The fault light will be on **continuously**. This indicates that input current has been exceeded.

All fault signals will remain on for a minimum of 10 seconds. If fault clears, all will reset automatically except for over-current. To clear over-current, the power must be shut off for 5 seconds and then turned back on.

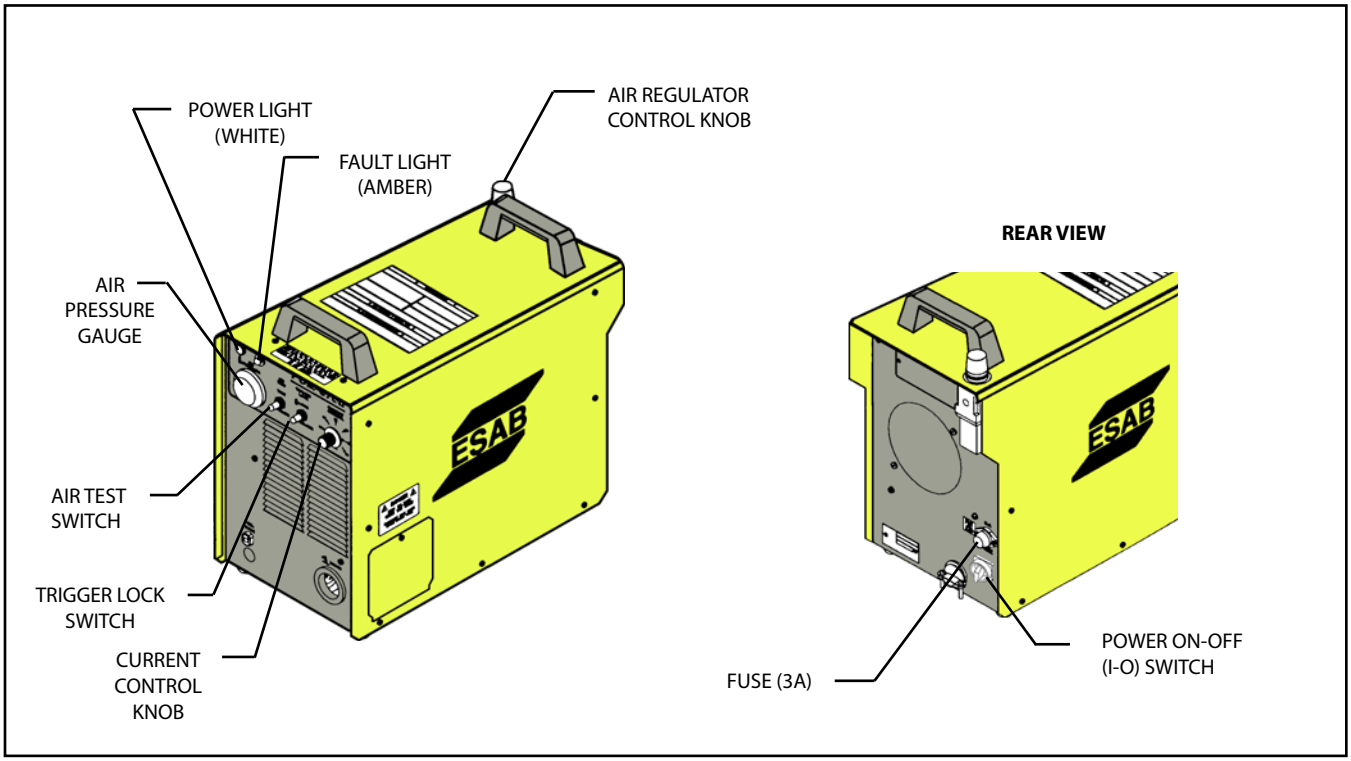

Figure 4-1. PCM-1125 Controls

4.3 CUTTING WITH THE PT-27

Use the following procedures to cut with the PT-27 torch (Figure 4-4).

A. Hold the torch nozzle approximately 1/8 to 3/16 inch above the work and tilted at about 15 - 30°. This reduces the chance of spatter entering the nozzle. If the PT-27's standoff tool is being used, set the standoff between 3/16 and 1/4-inch.

B. Depress the torch switch. Air should flow from the torch nozzle.

C. Two seconds after depressing the torch switch, the pilot arc should start. The main arc should immediately follow, allowing the cut to begin. (If using the trigger LOCK mode, torch switch may be released after establishing the cutting arc.)

D. After starting the cut, the torch should be maintained at a 5-15° forward angle (Figure 4-2). This angle is especially useful in helping to create a "drop" cut. When not using the standoff guide, the nozzle should be held approximately 1/4 inch from the work.

E. When ending a cut, the torch switch should be released (press and release if using trigger LOCK mode) and lifted off the workpiece just before the end of the cut. This is to prevent the high frequency from reigniting after cutting arc extinguishes and causing damage to the nozzle (double arcing).

F. For rapid re-starts, such as grate or heavy mesh cutting, do not release the torch switch. In the postflow mode, the arc can be re-started immediately by depressing the torch switch. This avoids the 2-second preflow portion of the cutting cycle.

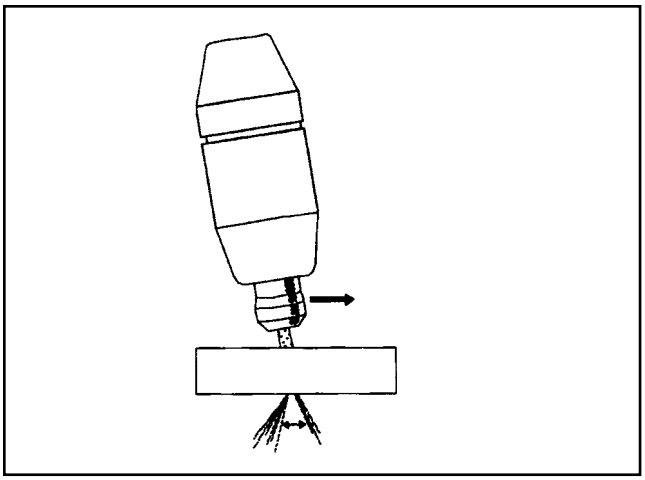

Figure 4-2. Recommended Torch Angle of 5° to 15°

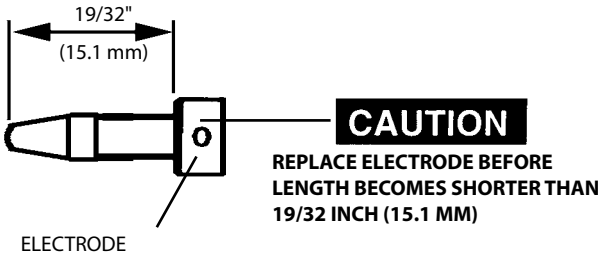

Figure 4-3. Electrode Wear Limit

NOTE: When replacing the nozzle, always inspect the electrode for wear. If less than 19/32" of electrode shaft is remaining, replace the electrode. If the electrode is used beyond this recommended wear limit, damage to the torch and power source may occur. Nozzle life is also greatly reduced when using the electrode below the recommended limit. Refer to Figure 4-3.

4.3.1. Drag Cutting with the PT-27/PCM-1125 System

Reduce current to 40 Amperes. Then follow steps in Section 4.3.

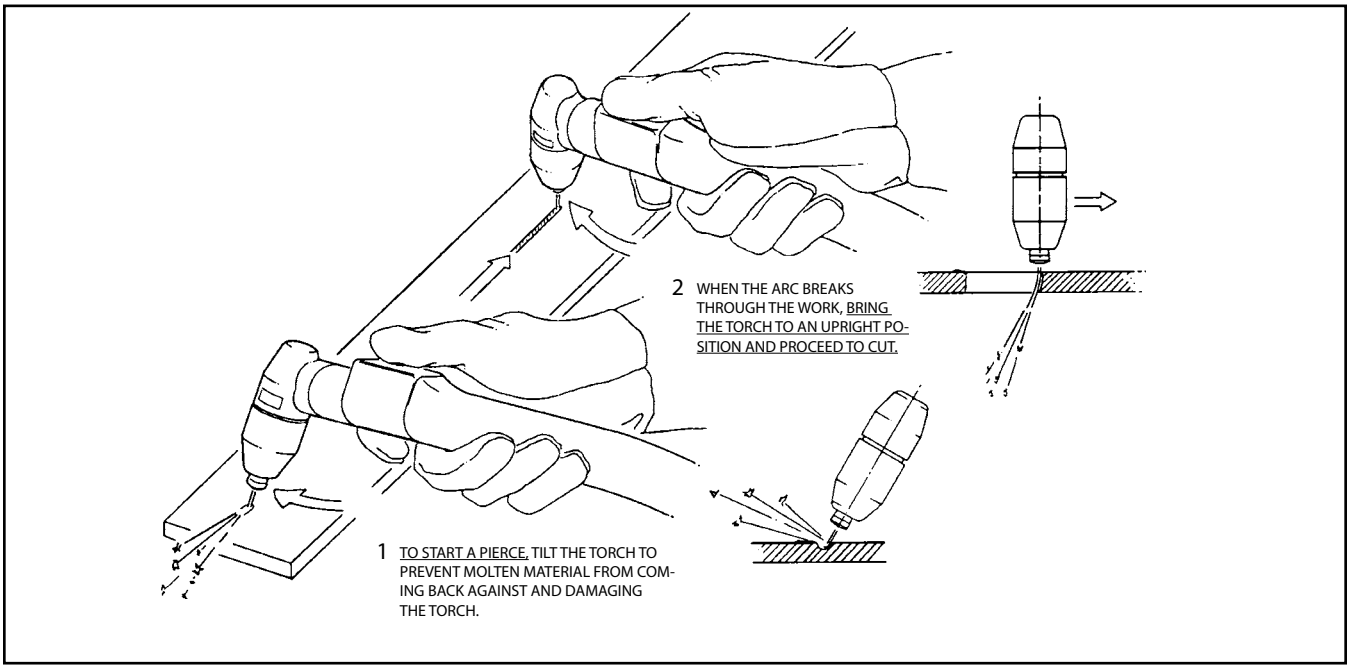

Figure 4-4. Piercing Technique using the PT-27

5.1 GENERAL

If this equipment does not operate properly, stop work immediately and investigate the cause of the malfunction. Maintenance work must be performed by an experienced person, and electrical work by a trained electrician. Do not permit untrained persons to inspect, clean, or repair this equipment. Use only recommended replacement parts.

WARNING **Be sure that the wall disconnect switch or wall circuit breaker is open before attempting any inspection or work inside of the PCM-1125.**

5.2 INSPECTION AND CLEANING

Frequent inspection and cleaning of the PCM-1125 is recommended for safety and proper operation. Some suggestions for inspecting and cleaning are as follows:

A. Check work cable for secured connection to workpiece.
B. Check safety earth ground at workpiece and at power source chassis.
C. Check heat shield on torch. It should be replaced if damaged.
D. Check the torch electrode and cutting nozzle for wear on a daily basis. Remove spatter or replace if necessary.
E. Make sure cable and hoses are not damaged or kinked.
F. Make sure all plugs, fittings, and ground connections are tight.
G. With all input power disconnected, and wearing proper eye and face protection, blow out the inside of the PCM-1125 using low-pressure dry compressed air.

CAUTION **Water or oil occasionally accumulates in compressed air lines. Be sure to direct the first blast of air away from the equipment to avoid damage to the PCM-1125.**

H. Occasionally, bleed all water from the filter beneath the air filter-regulator.

5.3 PT-27 TORCH CONSUMABLE PARTS

WARNING **Make sure power switch on PCM-1125 is in OFF position before working on the torch.**

WARNING **The PT-27 torch head contains a gas flow check valve that acts in conjunction with the flow switch and circuitry within the power source. This system prevents the torch from being energized with high voltage if the torch switch is accidentally closed when the shield is removed. Always replace torch with the proper torch manufactured by ESAB since it alone contains ESAB[1]s patented safety interlock.**

To assemble the consumable parts, refer to Figure 5-1.

A. Place nozzle, swirl baffle and electrode into the shield as shown.

B. Thread assembly to the torch body and hand tighten. **Always make sure the shield is very tight before cutting.**

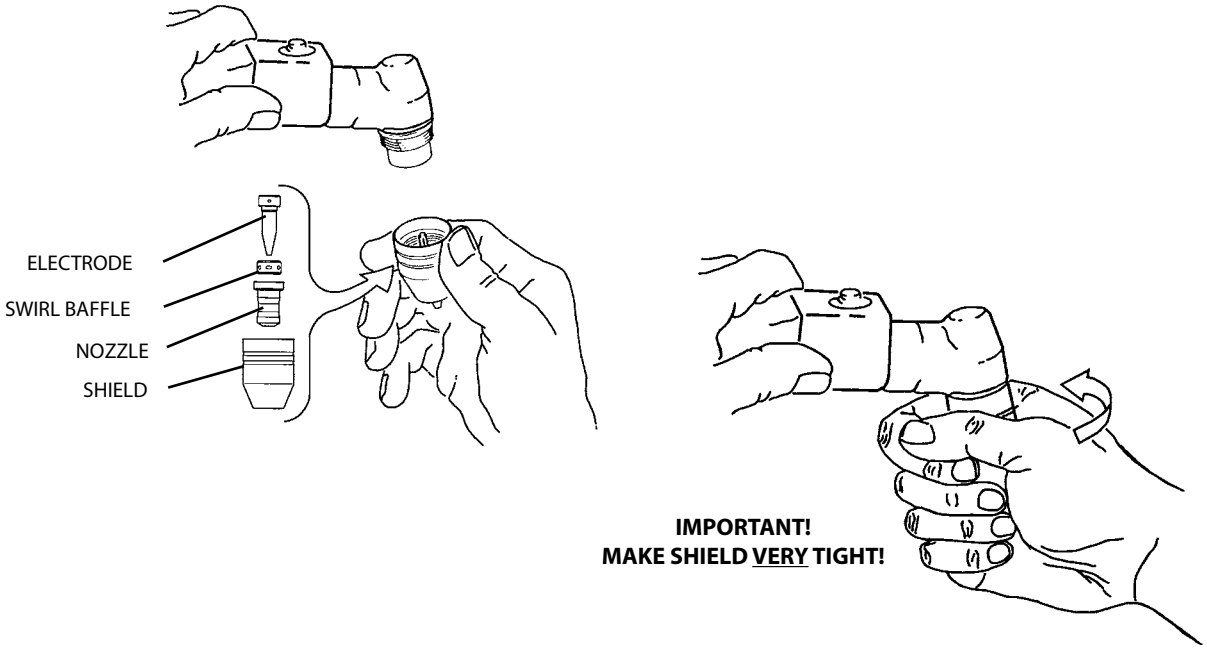

Figure 5-1. Assembly of PT-27 Torch Front End Parts

5.4 FLOW SWITCH (FIGURE 5-2)

When excessive contamination is found in the air, the flow switch (FS-4) should be disassembled and cleaned as follows:

A. Ensure the system is shut down and there is no trapped air under pressure in the piping.
B. Remove the piston plug.
C. Remove the spring. Use care when handling spring to prevent distortion.
D. Remove the piston.
E. Clean all parts with cleaning agent.

NOTE

Ensure cleaning agent does not contain solvents which can degrade polysulfone. Warm water and detergent is recommended for cleaning. Allow all parts to dry thoroughly before reassembly.

Reassemble the flow switch in reverse order.

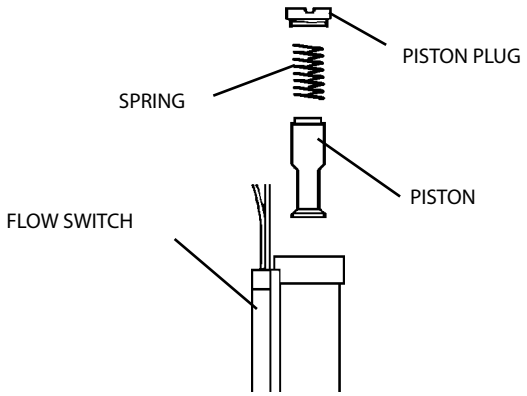

Figure 5-2. Disassembly / Assembly of Flow Switch

5.5 IGBT Handling & Replacement

Since IGBT gates are insulated from any other conducting region, care should be taken to prevent static build up, which could possibly damage gate oxides. All IGBT modules are shipped from the factory with conductive foam contacting the gate and emmiter sense pins.

Always ground parts touching gate pins during installation. In general, standard ESD precautlions application to FETs should be followed.

Other handling precautions that should also be observed are as follows:

- Use grounded work station with grounded floors and grounded wrist straps when handling devices.
- Use a 100Ω resistor in series with the gate when performing curve tracer tests.
- Never install devices into systems with power connected to the system.
- Use soldering irons with grounded tips when soldering to gate terminals.

When mounting IGBT modules on a heatsink, certain precautions should be taken to prevent any damage against a sudden torque. If a sudden torque ("one-sided tightening") is applied at only one mounting terminal the ceramic insulation plate or silicon chip inside the module may get damaged.

The mounting screws are to be fastened in the order shown in Figure 5-3. Also, care must be taken to achieve maximum contact (i.e. minimum contact thermal resistance) for the best heat dissipation.

Application of a thermal pad on the contact surface improves its thermal conductivity. See Replacement Parts section for the required pad.

A torque wrench should be used. Tighten mounting screws to 28 in-lbs; wire connecting screws to 19 in-lbs. If torque is too heavy, the device can damage like the above "one-sided tightening".

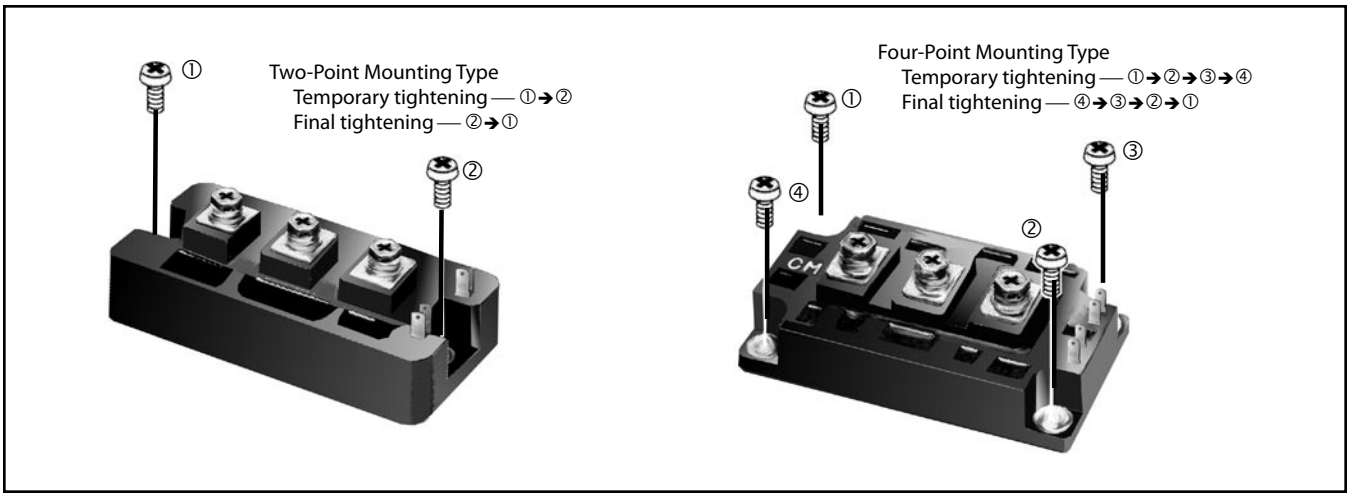

Figure 5-3. Screw Fastening Order

5.6 TROUBLESHOOTING

WARNING

ELECTRIC SHOCK CAN KILL! Be sure that all primary power to the machine has been externally disconnected. Open the line (wall) disconnect switch or circuit breaker before attempting inspection or work inside of the power source.

Check the problem against the symptoms in the following troubleshooting guide. The remedy may be quite simple. If the cause cannot be quickly located, shut off the input power, open up the unit, and perform a simple visual inspection of all the components and wiring. Check for secure terminal connections, loose or burned wiring or components, bulged or leaking capacitors, or any other sign of damage or discoloration.

The cause of control malfunctions can be found by referring to the sequence of operations and electrical schematic diagram (Figure 5-4) and checking the various components. A volt-ohmmeter will be necessary for some of these checks.

WARNING

Voltages in plasma cutting equipment are high enough to cause serious injury or possibly death. Be particularly careful around equipment when the covers are removed.

NOTE

Before checking voltages in the circuit, disconnect the power from the high frequency generator to avoid damaging your voltmeter.

NOTE:
Schematics and Wiring Diagrams on 11″ x 17″
paper are included
inside the back cover of this manual.

5.7 TROUBLESHOOTING GUIDE

A. Power Light (PL1) does not come on.

1. Visually inspect the machine for any damage.

2. Check if the cooling fan is running. If not, then check the following :

   a. Check if the machine power cord is plugged into the input power receptacle.

   b. Measure the input power at the receptacle. If not present, then check the wall disconnect switch and it's fuses.

   c. Check Fuse (F1). If fuse is ok, then check the input circuit breaker (CB1) for proper operation. Replace if defective.

3. If above items check OK , the problem is internal. Send unit to an Authorized Repair Station for repair.
   a. If the cooling fan is running, then measure voltage between pins P2-11 and P2-14 of the control board (should be 115 VAC). If there is no voltage, then replace transformer T2.
   b. If the voltage is present, then the pilot light may be burnt out.

B. No Air Flow

1. Check air inlet supply. Unit requires 320 CFH at 65 psig.

2. Check air hose and connections. Tighten if leaking.

3. Does air flow when "air test" switch is in test position?

   a. If not, check torch consumables, replace if necessary.

   b. If above items check OK , the problem is internal. Take unit to an Authorized Repair Station for repair.

C. The Power light is on, but nothing happens when the torch switch is depressed. Fault light does not activate.

NOTE: Unplug high frequency connection before attempting to work on this problem.

1. Check the Pilot Arc fuse (F2) located on the rear panel. An open fuse will indicate a short in the torch. If the fuse is all right, then check the following:

   a. With the machine power on, depress the torch switch. On the control board the LED 1 should be lit as long as the switch is depressed. If not then check:

      i. Turn power off to the machine. Unplug Control board. Put an ohmmeter across P5-1 and P5-2 to take resistance reading. Depress torch switch. Meter should read a short. If not, then one of the following is not working properly:

      ii. Torch switch or the leads. Unplug the torch switch leads at the machine. Put a meter across the two plug pins. Should read a short when the torch switch is depressed. If not, then either broken switch leads or malfunctioning switch.

b. Check T2 transformer secondary voltages at the plugs P1 and P2. Refer to system schematic. Replace the transformer if the correct secondary voltages are not present.

c. If everything above checks out all right, then the PCB1 Control Board should be replaced.

D. Fault light activates when torch switch is closed.

The Fault circuit is used to monitor conditions necessary for the safe operation of the PCM-1125. The fault light will glow amber under the following conditions and operations will come to a complete stop:

1. **High/Low line voltage**. The Fault Light will **rapidly blink on and off** (5 times per second). This indicates that the input voltage is outside the "+" or "-" 15% safe operating range rating.

2. **Flow fault** - The fault light will be **mostly on** but will blink off for 1/10th of a second every second. This indicates that the air flow is low.
   a. Check the air pressure at the machine regulator. It should be adjusted to 65 psig. If no air pressure, check the air at the supply point. Also, check for any obstructions in the air hose.
   b. Air flow may be blocked at the torch tip. Check the torch consumables. Also check for any obstructions in the torch leads.

   NOTE: If above items check OK , the problem is internal. send unit to an Authorized Repair Station for repair.
   c.. Put the 'Air Check' switch to On position. Air should flow through torch. If not, then the flow switch may be stuck due to oil in the air. Clean air flow switch per supplier's instructions or replace switch. To check if the flow switch is open, put voltmeter leads between P1-12 and P1-1. It should read about 12 VDC. When the flow switch closes, the voltage will drop to zero volts.
   d. Air Check switch may also be malfunctioning if the air is flowing continuously or putting in the On position does not turn air on.

3. **Over Temperature.** The fault light will be **mostly off** but will blink on for 1/10 of a second, every second. This generally indicates that the air flow has been blocked. Clear blockage and allow the power source to cool before operating.

   a. Thermal switch may be open. It will open if the heat sink temperature reaches 80°C. With the machine power off, check the continuity between P1-1 and P1-2 of the control board. If the switch is OK, then the ohmmeter should read a direct short. If not then it should read open.
   b. If the switch is malfunctioning, replace it. Clean the surface of the heat sink before installing the switch.

4. **Over Current**. The fault light will be on **continuously**. This indicates that the input current to the main transformer has exceeded preset limits.

   a. To check if the output is shorted, measure the resistance by putting the ohmmeter leads (make sure to disconnect HI Frequency leads):"+" of the meter to Torch "+" output terminal and Work "-" lead of the meter to the "-" output terminal. Reading should be about 2 K Ohms. Reverse the voltmeter leads, the resistance reading should be less than 1.5 K Ohms.
   b. If the resistance reading is different than above, check the torch, the output bridge and Filter Board (PCB-5).

E. Air is On but nothing happens when torch switch is operated.

1. Check the pilot arc fuse located on the rear panel. If it is open, nothing will happen when the torch switch is depressed.

2. Check the torch. Make sure the heat shield is very tight.

3. Check to assure high frequency is present at the torch. If not, then listen for high frequency at the high frequency generator. It is located on the bottom/right side of the unit. The high frequency gap is set to 0.040". **Disconnect HI FREQUENCY leads**. Check for 115 volt supply to the high frequency unit between P2-12 & P2-13 of the control board with torch switch closed.

4. With HI FREQUENCY leads disconnected, measure open circuit voltage. It should be 275 VDC between "Work" and "Torch" terminals. If it is not present then any one of the following may not be working properly:

   a. Check the operation of the Thermal Switch. See D.3.a. above.

   b. Check Air Check switch operation. It might be stuck in On position. Pilot arc will not initiate if this switch is in the ON position. (safety reasons)

   c. Check air flow switch. There may be internal short. See D.2.c above.

   d. Measure voltage across C1 or C2 capacitor. It should be as follows:

      approx. 325 VDC with 230 V supplied to the 208/230 volt unit.
      approx. 294 VDC with 208 V supplied to the 208/230 volt unit
      approx. 280 VDC with 400 V supplied to the 400 volt unit.
      approx. 325 VDC with 460 V supplied to the 460 volt unit
      approx. 400 VDC with 575 V supplied to the 575 volt unit

      If not, one of following could be malfunctioning:

      1). Check the capacitors C1 and C2 for any damage.

      2.) Check input bridge/SCR Module (IBR) This can be checked without taking it out of the circuit using an volt/ohmeter. Replace it if found malfunctioning. Follow bridge installation instructions.

      3.) Check Inrush current resistor, R10 and SCR1. Both are located on the input bridge heat sink. Replace it if malfunctioning.

   e. IGBTs (2 on 230 V, and 1 on the 460 V & 575 V units) may be damaged. See IGBT installation procedure. Before replacing IGBTs, make sure to check the zener diodes and pico fuses on the IGBT driver boards.

F. High Frequency and Pilot Arc are on but Main Arc does not transfer.

1. Make sure work clamp is connected to work material.

2. Check the torch. Replace consumables if necessary.

3. Make sure the current setting potentiometer is set above 10 amps. If it is, set below 10 amps, then HI FREQUENCY will go on and off at 5 sec intervals.

G. Poor Cutting Performance.

1. Check air supply regulator . It should be adjusted to 65-75 psig.

2. The air supplied to the torch should be free of oil and water.

3. Make sure the consumables in the torch are acceptable.

4. Check open circuit voltage. See E.4 above.

5. Check the output. Use a calibrated current probe capable of measuring 100 amps in the presence of high frequency.

H. Air does not shut off.

1. Check air test, the gas solenoid valve is energized when the switch is in the "on" position.

2. Does air flow stop when the torch switch is unplugged? If yes, check and repair the torch. If not, send unit to an Authorized Repair Station for repair.

   a. Check voltage to solenoid coil, if present when torch switch is unplugged, replace PCB1. If voltage is "0", replace solenoid valve.

I. Main arc is difficult to start.

1. The most common reason is worn or missing consumables. Check and replace if necessary.
2. Input air must be clean and dry.
3. Input air pressure must be between 65 - 75 psig.
4. Torch connections must be tight.
5. Work cable and clamp must be in good condition and must make a good electrical connection to the material to be cut.
6. If above items check OK , the problem is internal. send unit to an Authorized Repair Station for repair.
   a. Missing or weak pilot arc. Check pilot arc fuse, open circuit voltage, pilot arc resistors and pilot arc wiring.
   b. Inoperative starter board (PCB-5).

5.8 COMMON CUTTING PROBLEMS

Listed below are common cutting problems followed by the probable cause of each. If problems are determined to be caused by the PCM-1125, refer to the maintenance section of this manual. If the problem is not corrected after referring to the maintenance section, contact your ESAB distributor.

A. Insufficient Penetration.

1. Current too low.
2. Cutting speed too fast.
3. Damaged cutting nozzle.
4. Improper air pressure.
5. Low air flow rate.

B. Main Arc Extinguishes.

1. Cutting speed too slow.
2. Worn electrode.

C. Dross Formation. (In some materials and thicknesses, it may be impossible to get dross-free cuts.)

1. Current too low.
2. Cutting speed too fast or too slow.
3. Improper air pressure.
4. Faulty nozzle or electrode.
5. Low air flow rate.

D. Double Arcing. (Damaged Nozzle Orifice.)

1. Nozzle contacting work when current is set over 40 amps.
2. Low air pressure.
3. Damaged cutting nozzle.
4. Loose cutting nozzle.
5. Heavy spatter accumulation on nozzle.

E. Uneven Arc.

1. Damaged cutting nozzle or worn electrode.

F. Unstable Cutting Conditions.

1. Incorrect cutting speed.
2. Loose cable or hose connections.
3. Electrode and/or cutting nozzle in poor condition.

G. Main Arc Does Not Strike.

1. Worn electrode.
2. Loose connections.
3. Work cable not attached.

H. Poor Consumable Life.

1. Improper gas pressure.
2. Contaminated air supply.
3. Low air flow rate.

5.9 REFERENCE VOLTAGE CHECKS

A. Control Board Assembly (PCB1)

1. **LED's**

LED-1	-	Torch Switch
LED-2	-	High Frequency
LED-3	-	Gas Solenoid Valve

2. **Voltage Test Points**

Tests are made with power on - no arc.
Disable High Frequency by disconnecting blue wire with black sleeve

TP-0	-	Ground
TP-1	-	+15 vdc
TP-2	-	+12 vdc
TP-3	-	-12 vdc
TP-4	-	+5 vdc
TP-9	-	IGBT's driving signal - switching frequency = 16 KHz
TP-10	-	IGBT's driving signal - switching frequency = 16 KHz

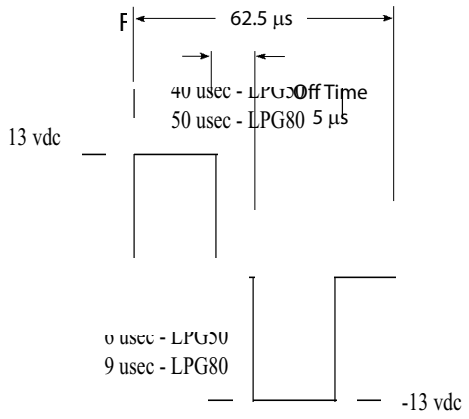

Figure 5.4 IGBT Gating Signal

5.10 SEQUENCE OF OPERATION

A. TRIGGER LOCK "UNLOCK" position

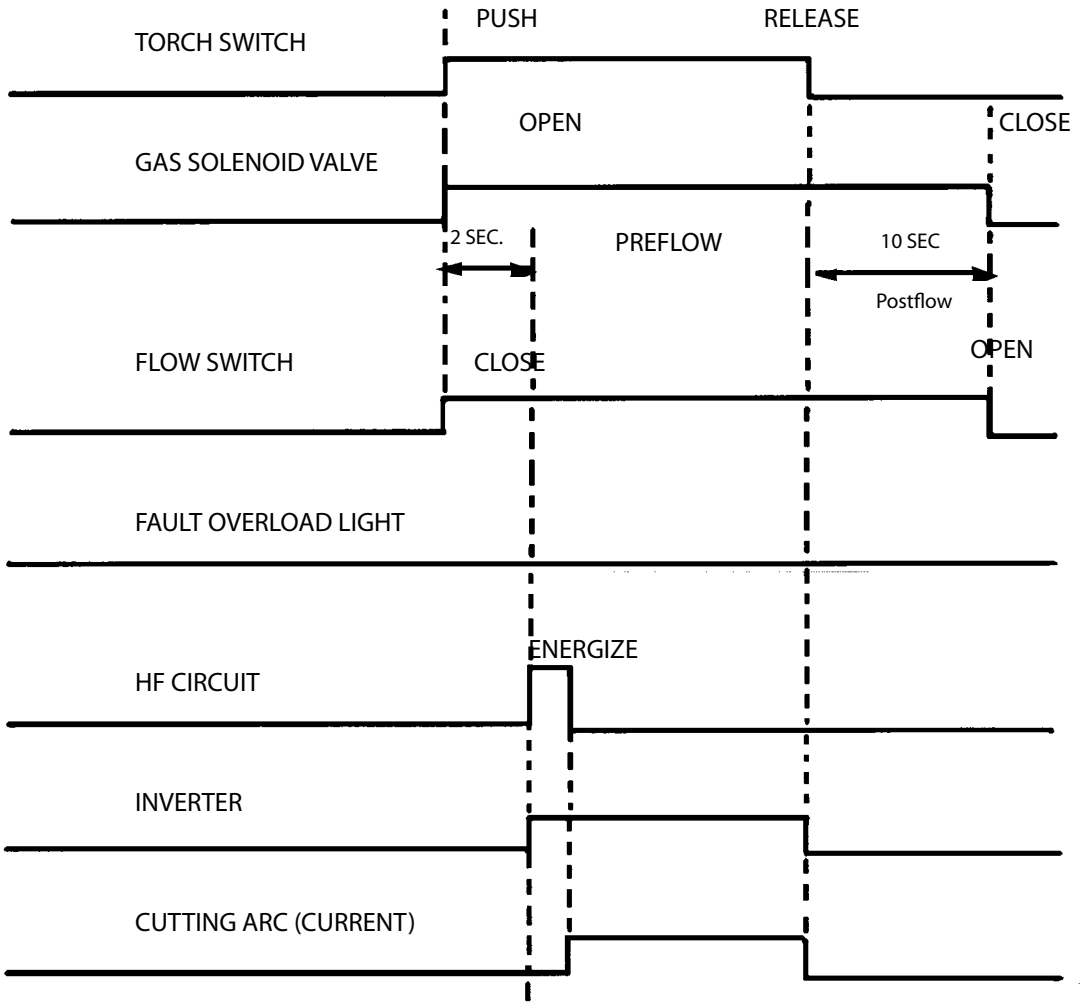

NOTES:

1. When the torch switch is pushed during postflow period, the postflow and preflow times are canceled, and the HF is energized immediately.

2. When the amber fault light comes on, cutting operation should be stopped. The postflow time starts from the moment the torch switch is released.

B. TRIGGER LOCK "LOCK" position

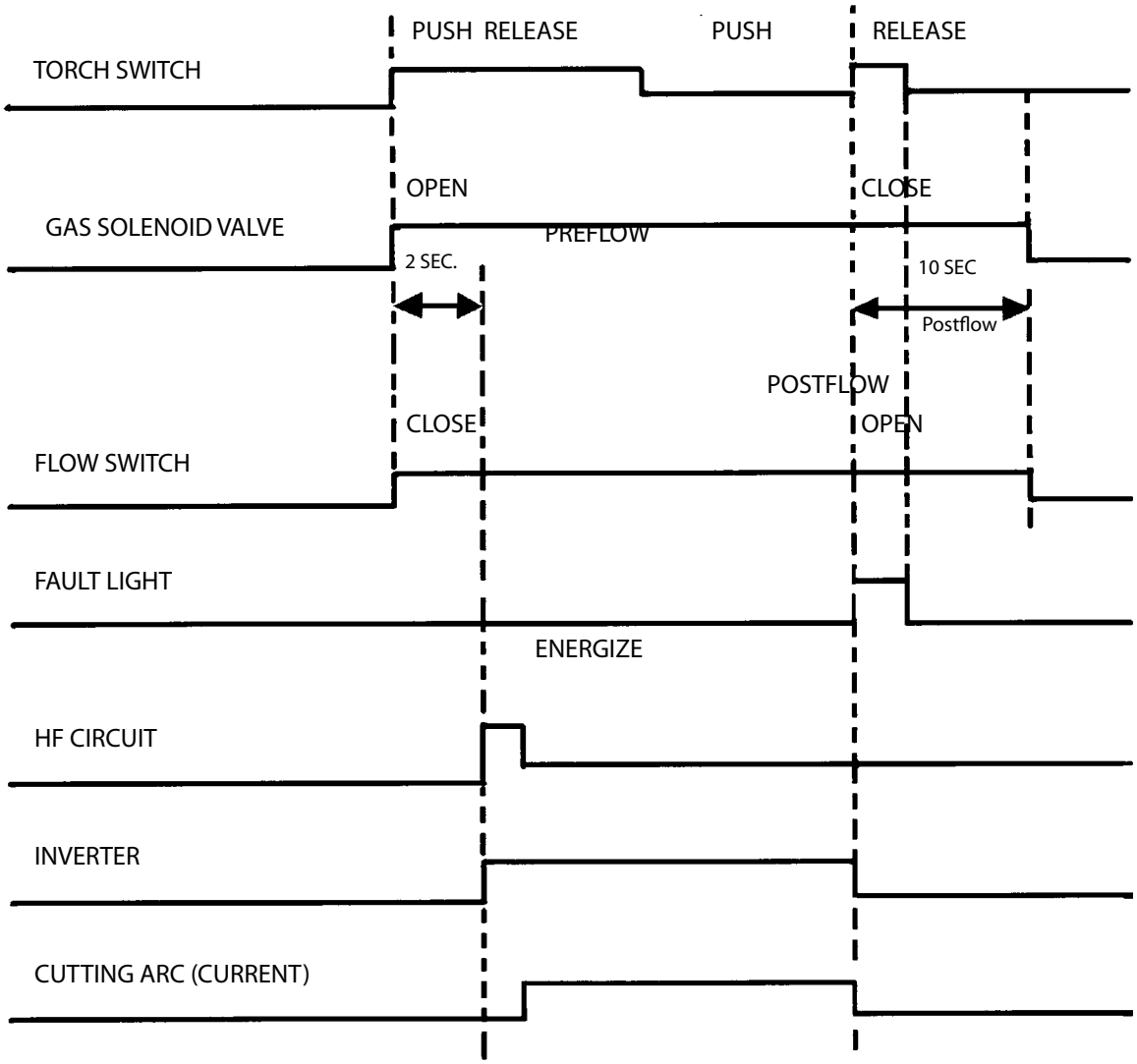

NOTES:

1. When the torch switch is pushed during postflow period, the postflow time is reset, the preflow time is canceled, and the HF is energized immediately.

2. When the red fault light comes on, cutting operation should be stopped. The postflow time starts from the moment the torch switch is released.

3. FAULT light is on during second "turn-off" trigger only. This does not affect performance in any way.

6.0 Replacement Parts

6.1 General

Always provide the serial number of the unit on which the parts will be used. The serial number is stamped on the unit nameplate.

6.2 Ordering

To ensure proper operation, it is recommended that only genuine ESAB parts and products be used with this equipment. The use of non-ESAB parts may void your warranty.

Replacement parts may be ordered from your ESAB Distributor.

Be sure to indicate any special shipping instructions when ordering replacement parts.

Refer to the Communications Guide located on the back page of this manual for a list of customer service phone numbers.

Note

Bill of material items that have blank part numbers are provided for customer information only.
Hardware items should be available through local sources.

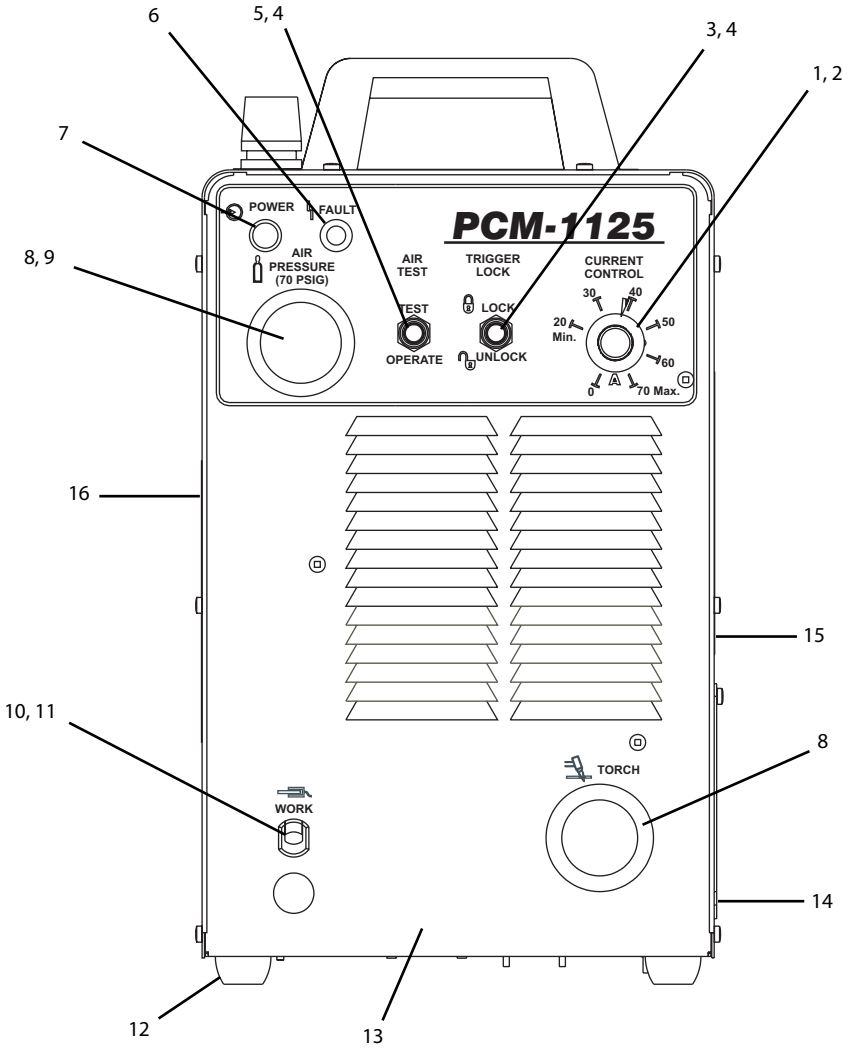

Fig. 6-1. PCM-1125 Power Source, Front View

Item No.	Qty Req.	Part No.	Description	Circuit Symbol
1	1	13730611	KNOB	
2	1	0558001176	POT. 10K 2W (NOMEX INSUL - 676876)	R1
3	1	673213	SWITCH TOGGLE SPST 2 POS 15 A 125 V	S3
4	2	951474	SWITCH SEAL BLACK	
5	1	634518	SWITCH TOGGLE DPDT 2 POS 15 A 125 V	S2
6	1	951754	LAMP LED YEL 12 V	PL2
7	1	951526	LAMP NEON WHITE	PL1
8	2	993426	GROMMET RUBBER 1.50 ID x 1.76 OD	
9	1	21711	GAUGE 1.50 160 PSI WHITE	
10	1	23602576	STRAIN RELIEF EYCO #1214	
11	1	680560	WORK CABLE 25 FT. . (Not Shown)	
12	4	182W12	FOOT RUBBER	
13	1	0558001251GY	CHASSIS PCM-1125	
14	1	36330YL	DOOR ACCESS YEL	
15	1	954008	LABEL WARNING HI VOLTAGE	
16	2	13734588	LABEL ESAB	

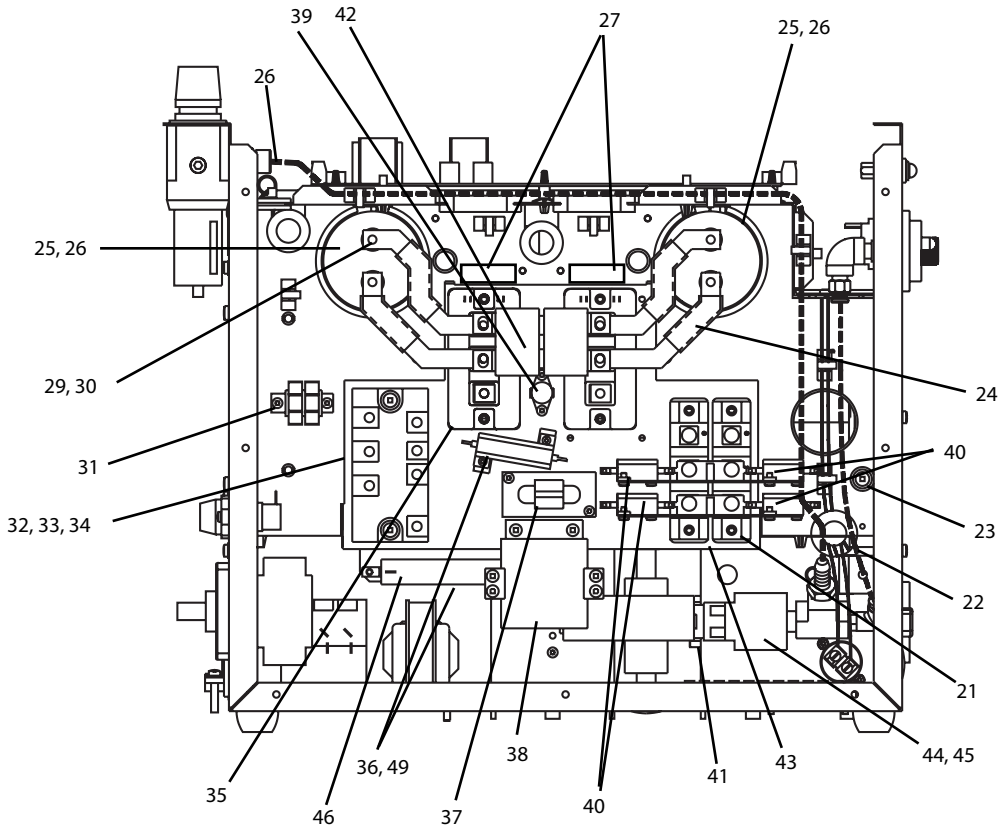

Fig. 6-2. PCM-1125 Power Source, Left Side View (208/230)

Item No.	Qty Req.	Part No.	Description	Circuit Symbol
21	2	951185	BRIDGE 100ADC 100NS 600 V (includes PAD - 951518)	D1, 2
22	1	952002	CORE SATURABLE	L3
23	1	952208	STANDOFF INS.	TB3
24	1	36731	BUSBAR NEG	
25	2	952237	CAPACITOR 1800µf 450VDC	C1, 2
26	2	994674	GROMMET STRIP	
27	2	0558001177	PCB ASS'Y 1GBT DRIVER BOARD	PCB2, 3
28	1	36822	HOSE AY B/A-2X 1/4NPT RUB 2 FT	
29	1	36730	BUSBAR POS	
30	1	951028	CAPACITOR 1µf 630VDC (Not shown - see wiring)	C3
31	1	950487	TERM BLOCK 2 POS	TB5
32	1	952235	MODULE INPUT BRIDGE/SCR (includes PAD - 952280)	IBR
33	1	2062282	CAPACITOR .22µf 1KV (See wiring)	C19
34	3	951321	METAL OXIDE VARISTOR 275 V (See wiring)	MOV1, 2, 3
35	2	952873	IGBT 600 V 200 A includes (PAD - 951191)	Q1, 1
36	2	17750010	RESISTOR 50 W 10 OHM (PAD - 951194)	R7
37	1	32958	CURRENT TRANSFORMER ASS'Y	T4
38	1	952255	CAPACITOR 40 µf 400 VDC	C4
39	1	950711	THERMAL SWITCH 194°F	TS1
40	4	17721020	RESISTOR 24 W 20 OHMS (PAD 951193)	r3, 4, 5, 6
41	1	951202	FLOW SWITCH .25 GPM	FS
42	2	951940	CAPACITOR 1µf 630W VDC	C15, 16
43	1	952887	HEATSINK	
44	1	950249	SOL. VALVE 1/4NPT 165 PSI 24 VAC	SOL1
45	1	951471	DIODE ZENER 60 V 75 MA (See Wiring)	ZD1
46	1	17250010	RESISTOR WW FIXED 50 W 10 OHM	R10
47	2	37562	BUSBAR OBR	
48	4	951313	CAPACITOR PULSE 0.01µf 1 KV	C5, 6, 7, 8
49	1	951314	CAPACITOR .022µf 1 KV	C10

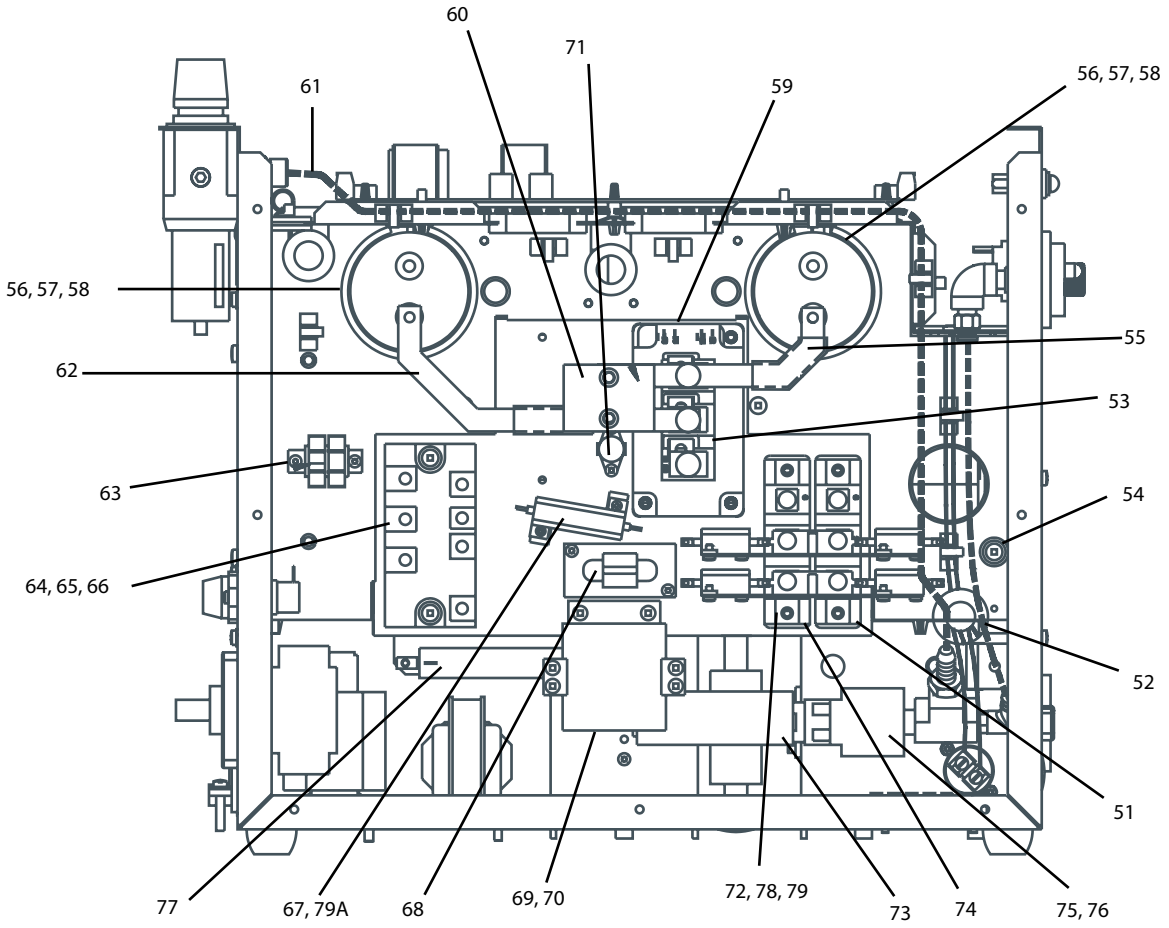

Fig. 6-3. PCM-1125 Power Source, Left Side View (460/575)

Fig. 6-3. PCM-1125 Power Source, Left Side View (460/575)

Item No.	Qty Req.	Part No.	Description	Circuit Symbol
51	2	951185	BRIDGE 100ADC 100NS 600 V (includes PAD - 951518)	D1, 2
52	1	952002	CORE SATURABLE	L3
53	1	952872	MODULE DUAL IGBT 200A, 1200 V (460 V)	Q1
		951831	MODULE DUAL IGBT 200A, 1400 V (575 V) (includes PAD - 951833)	Q1
54	1	952208	STANDOFF INS (Not used on 575 V)	TB3
55	1	37560	BUSBAR POS	
56	2	952237	CAPACITOR 180µf 450 VDC (460 V)	C1, 2
	2	952562	CAPACITOR 1800µf 500 VDC (575 V)	C1, 2
57	2	994674	GROMMET STRIP	
58	2	951028	CAPACITOR 1µf 630 VDC (See wiring)	C3, 15
59	1	0558001197	IGBT DRIVER PCB ASS'Y	PCB2
60	1	951964	CAPACITOR 2µf 800 VDC (460 V)	C16
	1	951892	CAPACITOR 0.68µf 1200 VDC (575 V)	C16
61	1	36822	HOSE ASS'Y B/A x 1/4 NPT RUB	
62	1	37561	BUSBAR NEG	
63	1	950487	TERM BLOCK 2 POS (Not used on 575 V)	TB5
64	1	952235	MODULE INPUT BRIDGE/SCR (includes PAD - 952280)	IBR
65	1	2062282	CAPACITOR .22µf 1KV (See wiring)	C19
66	3	950591	METAL OXIDE VARISTOR 510 V (See wiring)	MOV1, 2, 3
	3	951963	METAL OXIDE VARISTOR 625 V (575 V) (See wiring)	MOV1, 2, 3
67	1	17750010	RESISTOR 50W 10 OHM (PAD - 951194)	R7
68	1	32958	CURRENT TRANSFORMER ASS'Y	T4
69	1	952255	CAPACITOR 40µf 400 VDC (460 V)	C4
	1	952585	CAPACITOR 20µf 600 VDC (575 V)	C4
70	1	17145339	RESISTOR 39K 2W	R9
71	1	950711	THERMAL SWITCH 194°F	TS1
72	4	17721020	RESISTOR 25W 20 OHMS (PAD - 951193)	R3, 4, 5, 6
73	1	951202	FLOWSWITCH .25 GPM	FS
74	1	952887	HEATSINK	
75	1	950247	SOL, VALVE 1/4 NPT 165 PSI 24 VAC	SOL1
76	1	951471	DIODE ZENER 60 V 75M A	ZD1
77	1	17250010	RESISTOR WW FIXED 50 W 10 OHM	R10
78	4	951313	CAPACITOR PULSE 0.01µf 1KV	C5, 6, 7, 8
79	2	37562	BUSBAR OBR	
79A	1	951314	CAPACITOR .022µf 1KV	C10

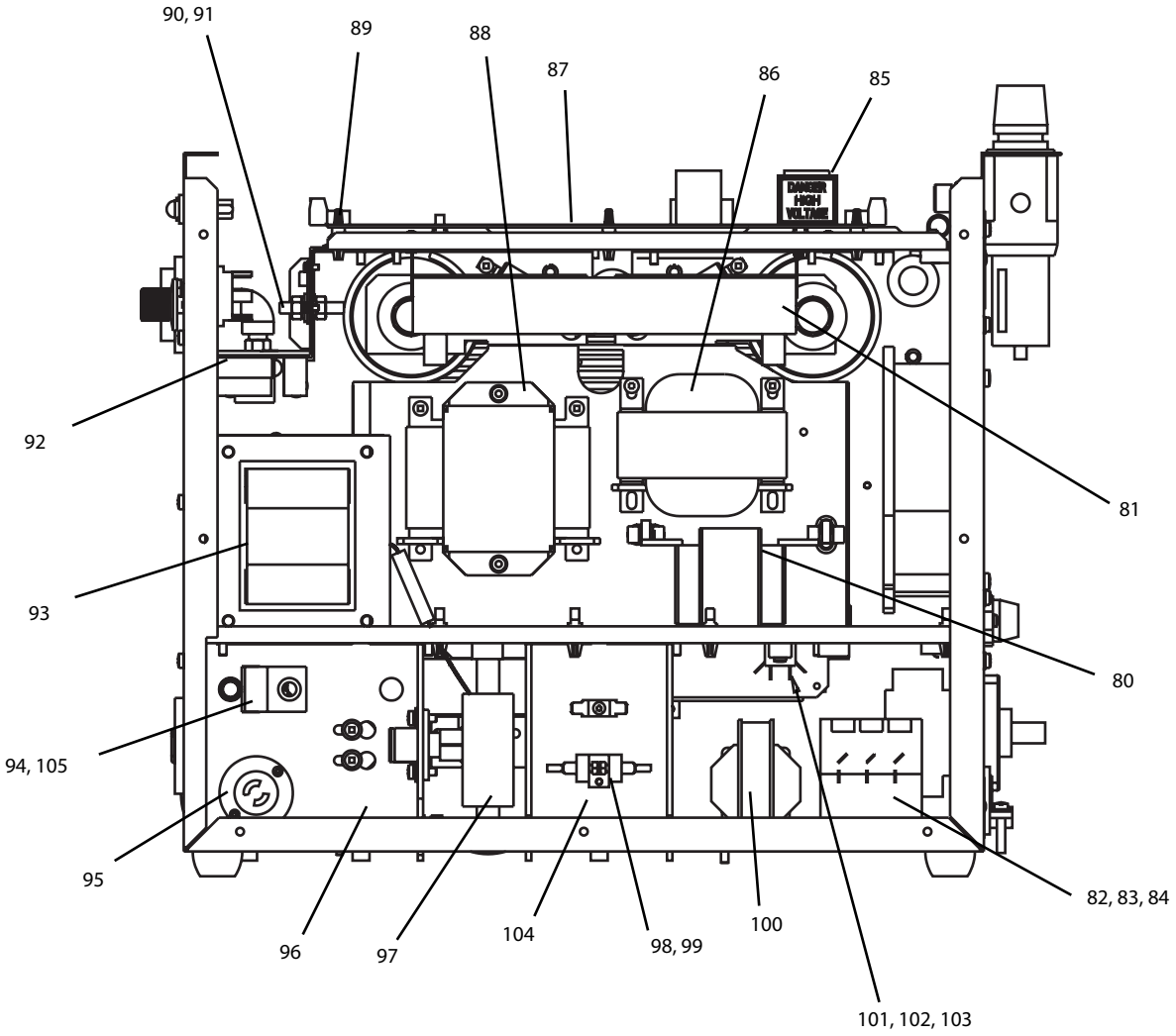

Fig. 6-4. PCM-1125 Power Source, Right Side View (208/230)

Fig. 6-4. PCM-1125 Power Source, Right Side View (208/230)

Item No.	Qty. Req.	Part No.	Description	Circuit Symbol
80	1	35940	CONTROL TRANSFORMER ASS'Y	T2
81	2	17300012	RESISTOR 300W 12 OHM	R11, 12
82	1	673458	CONTACTOR 3 POLE 110 VAC 40 A	K1
83	1	952557	CAPACITOR .82µf 630 VDC (See Wiring)	C21, 22
84	2	17130433	RESISTOR, CM FILM AL 1W 330K (See Wiring)	R13
85	1	23604891	LABEL WARNING HI VOLTAGE RED	
86	1	952232	INDUCTOR PFC	L2
87	1	38214	CONTROL BOARD ASS'Y	PCB1
88	1	37603	MAIN TRANSFORMER ASS'Y	T1
89	2	951469	CAPACITOR .022µf 250 VAC (See Wiring)	C17, 18
90	1	31488	SHUNT BOARD ASS'Y	PCB4
91	1	951515	CAPACITOR .047µf 660 VAC	C23
92	1	38039	START UP BOARD ASS'Y	PCB5
93	1	952233	INDUCTOR OUTPUT	L1
94	1	36721	BUSBAR OUTPUT	
95	1	182W64	LOCK TWIST MIDGET	J1
96	1	36717	BRACKET OUTPUT	
97	1	32969	REACTOR ASS'Y HI FREQ.	T3
98	1	36431	SPARK GAP ASS'Y	SG
99	2	951342	CAPACITOR 2500pf 15 K V	C13, 14
100	1	951179	TRANSFORMER HI VOLTAGE	T5
101	1	950487	TERM. BLOCK 2 POS 20 A	TB1
102	2	672348	CAPACITOR .01µf 1KV (See wiring)	C11, 12
103	1	952204	CAPACITOR .01µf 250 VAC (See wiring)	C9
104	1	36718	BOX HI FREQ.	
105	1	951314	CAPACITOR .022µF 1K V	C20

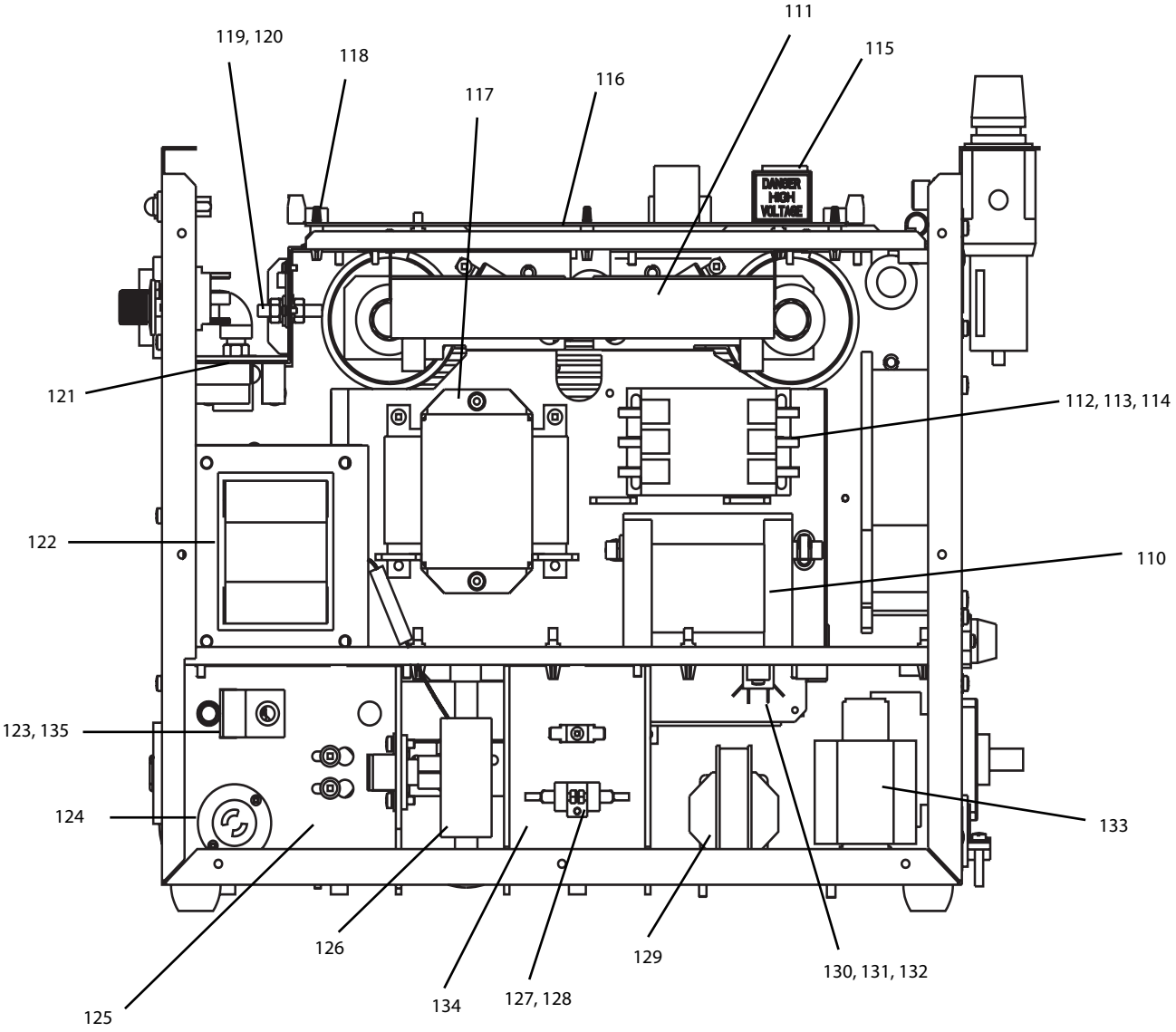

Fig. 6-5. PCM-1125 Power Source, Right Side View (460/575 V)

Fig. 6-5. PCM-1125 Power Source, Right Side View (460/575 V)

Item No.	Qty. Req.	Part No.	Description	Circuit Symbol
110	1	32914	CONTROL TRANSFORMER ASS'Y	T2
111	1	17300012	RESISTOR 300 W 12 OHM	R11, 12
112	1	673458	CONTACTOR 3 POLE 110VAC 40 A	K1
113	2	952557	CAPACITOR .82µf 630 VDC (See wiring)	C21
114	2	17130433	RESISTOR CM FILM AL 1W 330K (See wiring)	R13
115	1	23604891	LABEL WARNING HI VOLTAGE RED	
116	1	38214	CONTROL BOARD ASS'Y	PCB1
117	1	37603	MAIN TRANSFORMER ASS'Y (460 V)	T1
	1	36599	MAIN TRANSFORMER ASS'Y (575 V)	T1
118	2	951469	CAPACITOR .022µf 250 VAC (See wiring)	C17, 18
119	1	31488	SHUNT BOARD ASS'Y	PCB4
120	1	951515	CAPACITOR .047µf 660 VAC (See wiring)	C23
121	1	38039	START UP BOARD ASS'Y	PCB5
122	1	952233	INDUCTOR OUTPUT	L1
123	1	36721	BUSBAR OUTPUT	
124	1	182W64	LOCK TWIST MIDJET	J1
125	1	36717	BRACKET OUTPUT KYDEX	
126	1	32969	REACTOR ASS'Y HI FREQ.	T3
127	1	36431	SPARK GAP ASS'Y	SG
128	2	951342	CAPACITOR 2500pf 15 K V	C13, 14
129	1	951179	TRANSFORMER HI VOLTAGE	T5
130	1	950487	TERM. BLOCK 2 POS 20 A	TB1
131	2	672348	CAPACITOR .01µf 1KV (See wiring)	C11, 12
132	1	952204	CAPACITOR .01µf 250 VAC (See wiring)	C9
133	1	952213	REACTOR 3PH LINE 12 A	L2
134	1	36718	BOX HI FREQ	
135	1	951314	CAPACITOR .022µf 1K V	C20

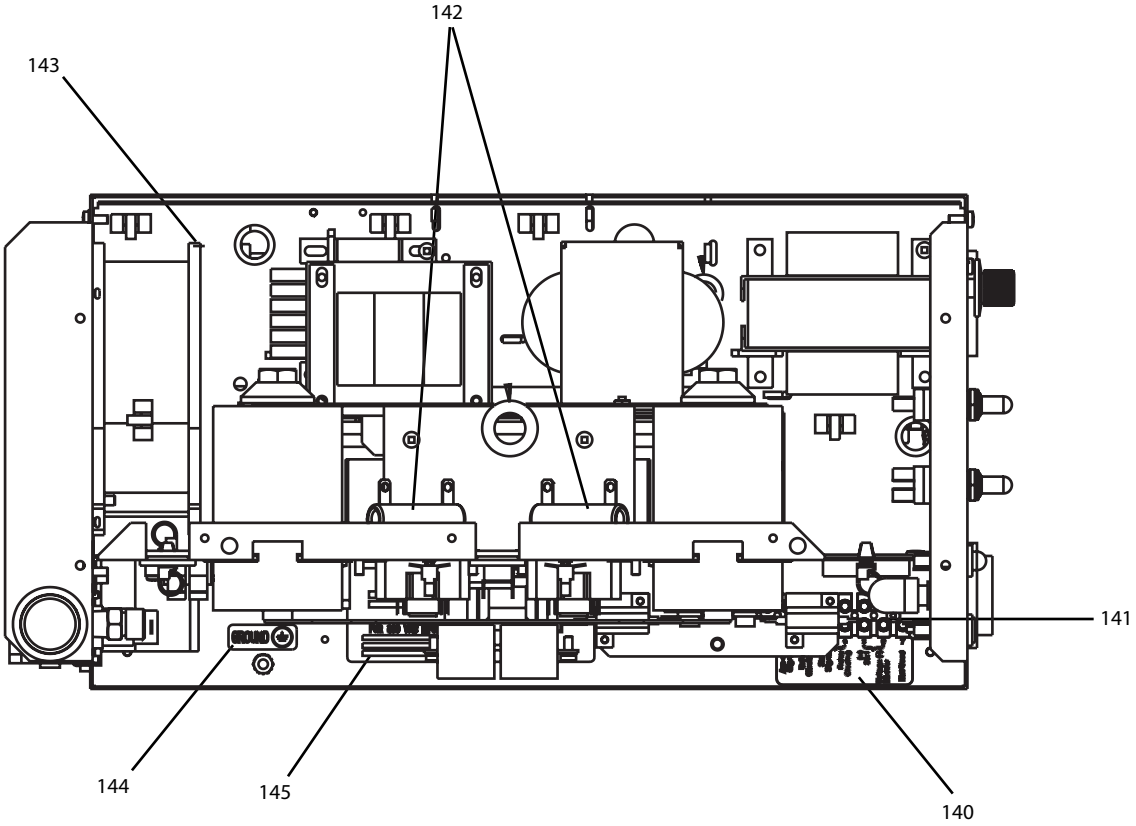

Fig. 6-6. PCM-1125 Power Source, Top View with PCB1 and Shelf Removed

Item No.	Qty. Req.	Part No.	Description	Circuit Symbol
140	1	954673	LABEL CNC INTERFACE	
141	1	952026	TERM. BLOCK 7 POS 25 A	TB4
142	2	17240310	RESISTOR 10 K 25 W	R2, 15
143	1	951182	FAN AC AXIAL	M1
144	1	2091558	LABEL GROUND BLACK	
145	1	954787	LABEL INPUT (208/230 V)	
	1	954681	LABEL INPUT (400/460 V)	

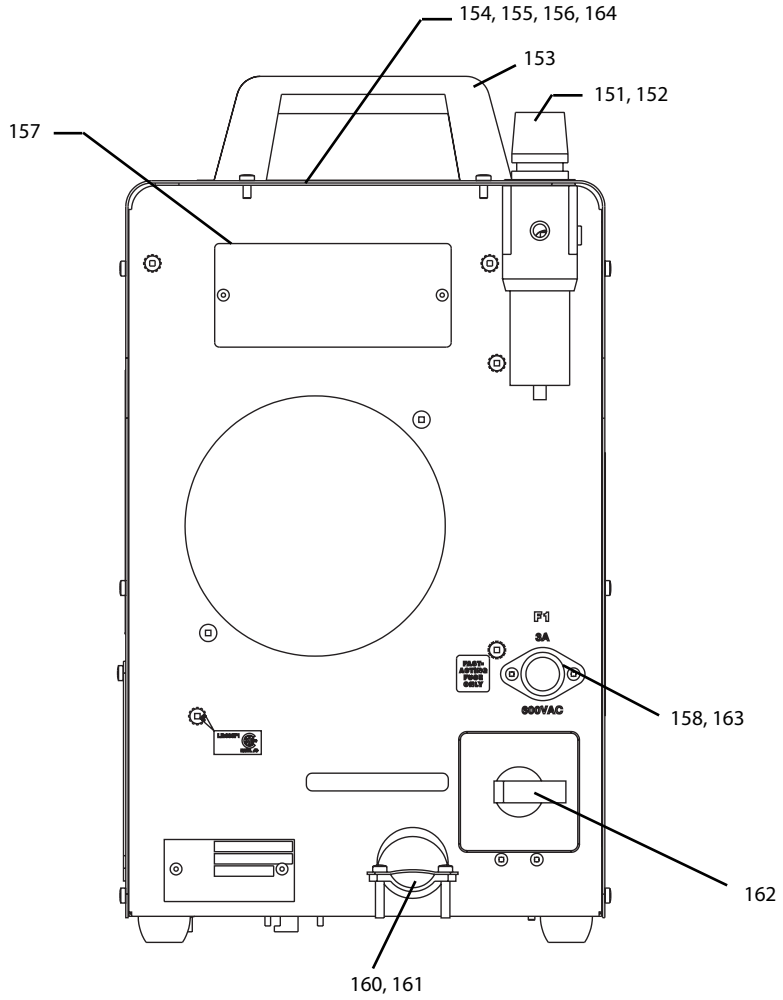

Fig. 6-7. PCM-1125 Power Source, Rear View

Item No.	Qty. Req.	Part No.	Description	Circuit Symbol
151	1	21710	FILTER, REGULATOR AIR LINE	
152	1	10Z30	ADAPTOR B/A-WM x 1/4 NPTM	
153	2	951575	HANDLE	
154	1	36719YL	TOP COVER YEL (ESAB)	
155	1	2091514	LABEL WARNING	
156	1	954290	LABEL WARNING	
157	1	954784	LABEL RATING PCM-1125 208/230	
	1	954785	LABEL RATING PCM-1125 460	
	1	954786	LABEL RATING PCM-1125 575	
158	2	952136	FUSE HOLDER	
160	1	97W63	STRAIN RELIEF	
161	1	37573	INPUT POWER CABLE, 6 FT 4-COND. 6AWG w/PLUG (208/230 V)	
	1	37574	INPUT POWER CABLE, 10 FT 4-COND. 10AWG (460/575 V)	
162	1	36107	SWITCH POWER 600 V 63 A	S1
163	1	952559	FUSE 3A FAST ACTING	F1
164	1	954746	LABEL FAULT INDICATOR	

NOTES

NOTES

NOTES

REVISION HISTORY

1. Revision “A” Updated format. Made chgs per change notice # 053013. In replacement parts section added filter regulator, item 151, p/n 0558005394 note. Moved schematics to 11 x 17 format.

2. Revision "A" - 12/2005 - Removed filter regulator, item 151, p/n 0558005394 note, in replacement parts section.

ESAB Welding & Cutting Products, Florence, SC Welding Equipment
COMMUNICATION GUIDE - CUSTOMER SERVICES

A. CUSTOMER SERVICE QUESTIONS:
Telephone: (800)362-7080 / Fax: (800) 634-7548 Hours: 8:00 AM to 7:00 PM EST
Order Entry Product Availability Pricing Order Information Returns

B. ENGINEERING SERVICE:
Telephone: (843) 664-4416 / Fax : (800) 446-5693 Hours: 7:30 AM to 5:00 PM EST
Warranty Returns Authorized Repair Stations Welding Equipment Troubleshooting

C. TECHNICAL SERVICE:
Telephone: (800) ESAB-123/ Fax: (843) 664-4452 Hours: 8:00 AM to 5:00 PM EST
Part Numbers Technical Applications Specifications Equipment Recommendations

D. LITERATURE REQUESTS:
Telephone: (843) 664-5562 / Fax: (843) 664-5548 Hours: 7:30 AM to 4:00 PM EST

E. WELDING EQUIPMENT REPAIRS:
Telephone: (843) 664-4487 / Fax: (843) 664-5557 Hours: 7:30 AM to 3:30 PM EST
Repair Estimates Repair Status

F. WELDING EQUIPMENT TRAINING
Telephone: (843)664-4428 / Fax: (843) 679-5864 Hours: 7:30 AM to 4:00 PM EST
Training School Information and Registrations

G. WELDING PROCESS ASSISTANCE:
Telephone: (800) ESAB-123 Hours: 7:30 AM to 4:00 PM EST

H. TECHNICAL ASST. CONSUMABLES:
Telephone : (800) 933-7070 Hours: 7:30 AM to 5:00 PM EST

IF YOU DO NOT KNOW WHOM TO CALL

Telephone: (800) ESAB-123
Fax: (843) 664-4462
Hours: 7:30 AM to 5:00 PM EST
or
visit us on the web at http://www.esabna.com
The ESAB web site offers
Comprehensive Product Information
Material Safety Data Sheets
Warranty Registration
Instruction Literature Download Library
Distributor Locator
Global Company Information
Press Releases
Customer Feedback & Support

ESAB ® ESAB Welding & Cutting Products
PO Box 100545, Florence SC 29501-0545

F15-707-A 12/2005

D-37567

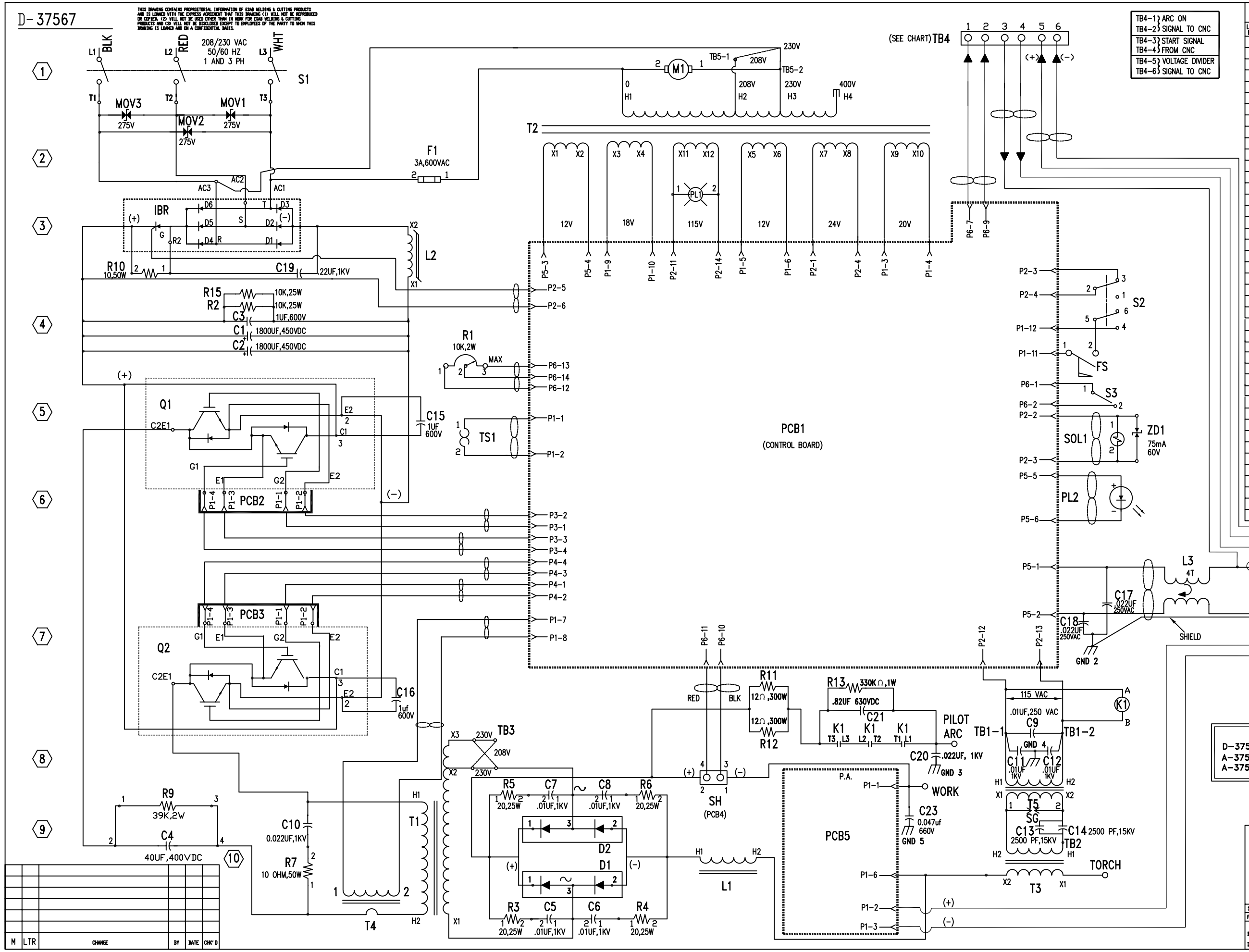

COMPONENT LEGEND

LOCATION NUMBER	ITEM	DESCRIPTION
1	S1	SWITCH 3PH 60A 600V
	M1	FAN MOTOR, 230 VAC
	TB5	TERMINAL BOARD
	TB4	TERMINAL BOARD
2	F1	FUSE,FAST ACTING,3A,600VAC
	PL1	PILOT LIGHT 125V
	T2	CONTROL TRANSFORMER
3	IBR	BRIDGE DIODE MODULE, 100A, 1600V
	S2	SWITCH, TOGGLE DPDT (AIR CHECK)
	L2	POWER FACTOR CORRECTION INDUCTOR
4	S3	SWITCH, TOGGLE (LOCK-IN)
	R1	POTENTIOMETER 10K 2W
	FS	FLOW SWITCH
5	Q1	IGBT MODULE, 1600V, 100A
	TS1	THERMAL SWITCH 90°C
	SOL1	SOLENOID, SWITCH (GAS)
	PCB1	CONTROL P/C BOARD
	PL2	PILOT LIGHT, LED 12VDC
6	Q2	IGBT MODULE, 1600V, 100A
	PCB2	IGBT DRIVER P/C BOARD
	PCB3	IGBT DRIVER P/C BOARD
	J1	RECEPTACLE, 2-POLE
	L3	INDUCTOR
7	TB1	TERMINAL BOARD
	K1	CONTACTOR 120VAC 40A
8	SH	SHUNT P/C BOARD (PCB4)
	T5	HIGH VOLTAGE IGNITER
	PCB5	START-UP P/C BOARD
	SG	SPARK GAP
9	T1	MAIN TRANSFORMER
	D1,D2	BRIDGE 100 ADC 100ns 600V
	TB2	TIE POINT
10	LI	OUTPUT INDUCTOR
	T3	REACTOR ASSY.
	T4	CURRENT TRANSFORMER

REFERENCE DRAWINGS:

D-37568	WIRING DIAG 208/230V 1&3PH
A-37563	WIRE KIT MAIN
A-37564	WIRE KIT PRIM 208/230V 1&3PH

M	LTR	CHANGE	BY	DATE	CHK'D

ENGLISH DWG.
UNLESS OTHERWISE SPECIFIED, DIM ARE IN INCHES.
TOL .XX ± .015
.XXX ± .005
ANGLES ± 1°
SURFACE ROUGHNESS IS IN MICROINCHES.
ROUGHNESS √
REMOVE ALL BURRS
BREAK SHARP EDGES

PA-0900-98-16 REV 1 — 06/26/98
RELEASED FOR — DATE

ESAB WELDING & CUTTING PRODUCTS
FLORENCE SC 29501

TITLE
SCHEMATIC 1125 208/230V 1&3 PH

REPRO MADE FROM
SCALE NONE — SIMILAR TO
FIRST MADE FOR PCM 1125 — SUP.

DRAWN	CHECKED	APPROVED	SUP. BY
BY JVB	BY WJB	BY KAM	
DATE 02/27/98	DATE 02/27/98	DATE 02/27/98	D-37567

OCT 1995

D-37568

BILL OF MATERIALS

QUANTITIES ARE IN U/M ESTABLISHED BY INVENTORY

SYMBOL	ITEM NO.	PART OR CODE NO.	QTY.	DESCRIPTION

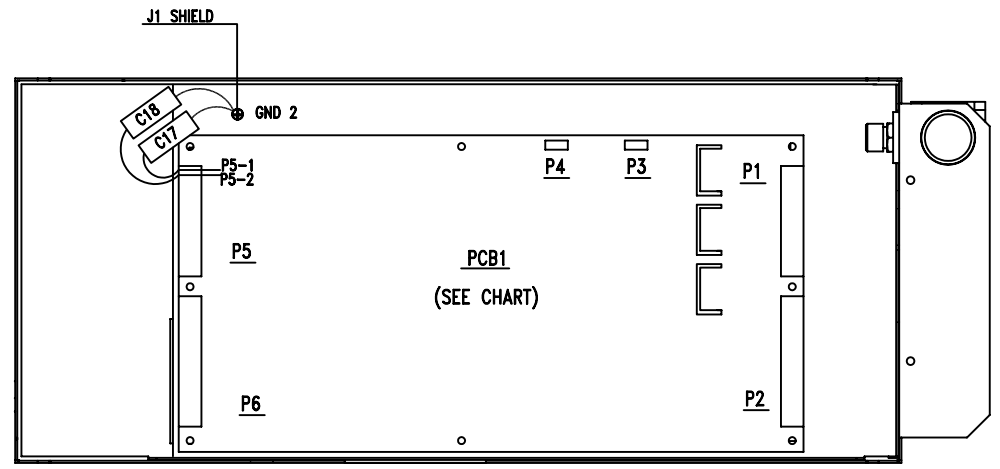

DETAIL "A" (PCB1)

P1			P2			P5			P6		
1	TS1-1	VIO	1	T2-X7	ORN	1	J1-1	CLR (TP)	1	S3-1	BLU
2	TS1-2	VIO	2	SOL1-1	WHT	2	J1-2	BLK (TP)	2	S3-2	BLU
3	T2-X9	BRN	3	SOL1-2	GRY	3	T2-X1	YEL	3	——	——
4	T2-X10	BRN	3	S2-3	GRY	4	T2-X2	YEL	4	——	——
5	T2-X5	BLU	4	T2-X8	ORN	5	PL2-(+)	RED	5	——	——
6	T2-X6	BLU	4	S2-2	ORN	6	PL2-(-)	BLK	6	——	——
7	T4-1	ORN	5	IBR-G	YEL			BLK	7	TB4-1	YEL
8	T4-2	ORN	6	IBR(+)	BRN	7	——	——	8	——	——
9	T2-X3	WHT	7	——	——	8	——	——	8	——	——
10	T2-X4	WHT	8	——	——	9	——	——	9	TB4-2	ORN
11	FS-1	RED	9	——	——	10	——	——	10	PCB4-3	BLK (TP)
12	S2-4	BLK	10	——	——	11	——	——			
			11	T2-X11	VIO	12	——	——	11	PCB4-4	RED (TP)
			11	PL1-1	YEL				12	R1-1	BRN
			12	TB1-1	BLU				13	R1-3	RED
			12	K1-A	BLU				14	R1-2	WHT
			13	TB1-2	BLU						
			13	K1-B	BLU						
			14	PL1-2	YEL						
			14	T2-X12	VIO						

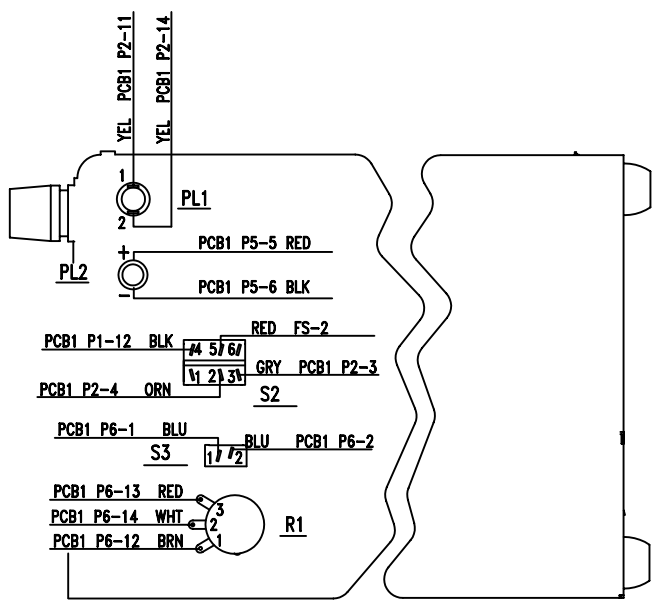

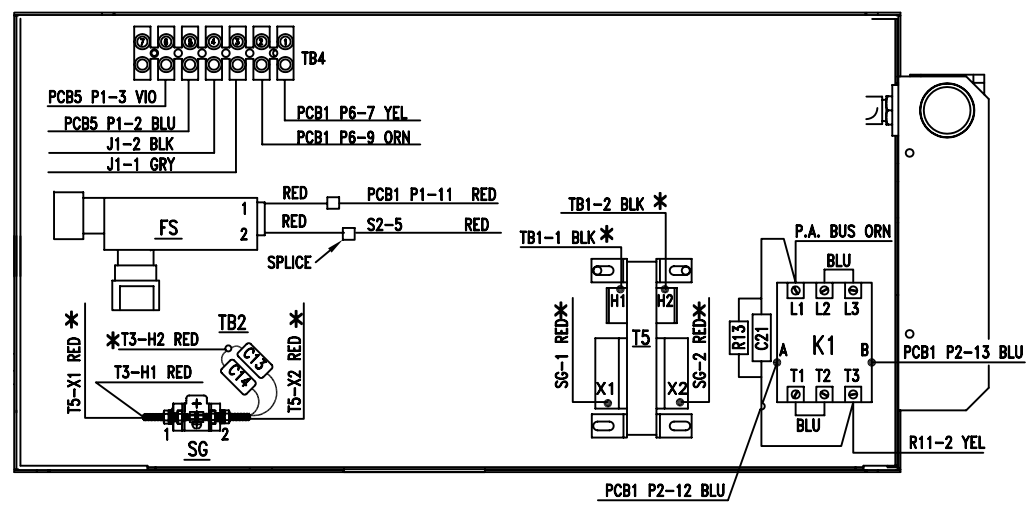

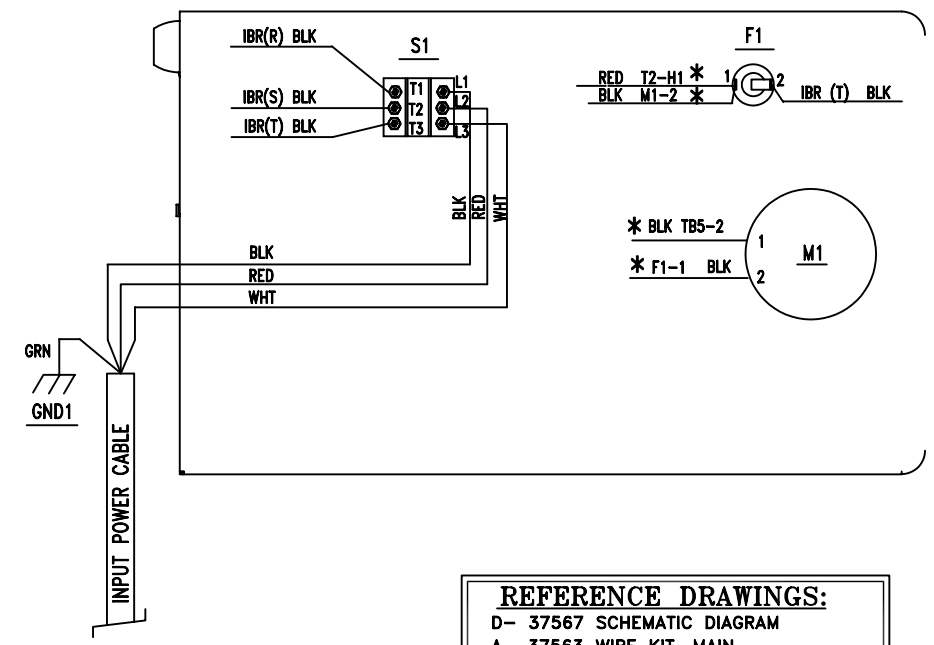

REFERENCE DRAWINGS:

D- 37567 SCHEMATIC DIAGRAM
A- 37563 WIRE KIT, MAIN
A- 37564 WIRE KIT, 208/230V 1/3 PH

NOTES:
1- * DENOTES SELF LEADS.
2- * (TP) DENOTES TWISTED PAIR.

SHEET 1 OF 2

M	LTR	CHANGE	BY	DATE	CHK'D

ENGLISH DWG.
UNLESS OTHERWISE SPECIFIED, DIM ARE IN INCHES.
TOL .XX ± .015
.XXX ± .005
ANGLES ± 1°
CHAMFERS & C'SINKS ±2°
SURFACE ROUGHNESS IS IN MICROINCHES. ✓
REMOVE ALL BURRS
BREAK SHARP EDGES

PA-6900-98-16 REV 1	06/26/98
RELEASED FOR	DATE

ESAB WELDING & CUTTING PRODUCTS
FLORENCE, SC 29501

TITLE
WIRING PCM 1125 208/230V 1/3PH

REPRO MADE FROM
SCALE NONE
SIMILAR TO D-36595
FIRST MADE FOR PCM 1125
SUP.
SUP. BY

DRAWN	CHECKED	APPROVED
BY JVB	BY WJB	BY KAM
DATE 07/27/98	DATE 07/27/98	DATE 07/27/98

D-37568

OCT 1995

D-37568

BILL OF MATERIALS

QUANTITIES ARE IN U/M ESTABLISHED BY INVENTORY

SYMBOL	ITEM NO.	PART OR CODE NO.	QTY.	DESCRIPTION

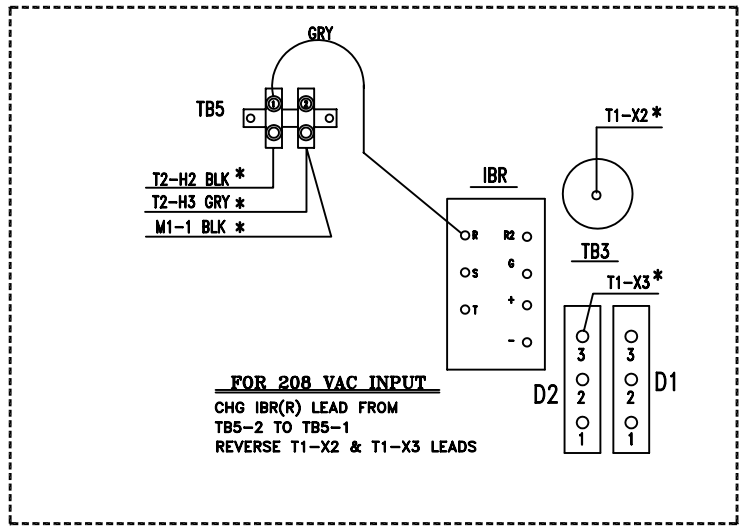

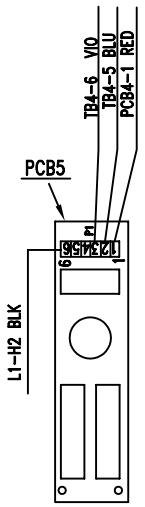

VIEW E-E

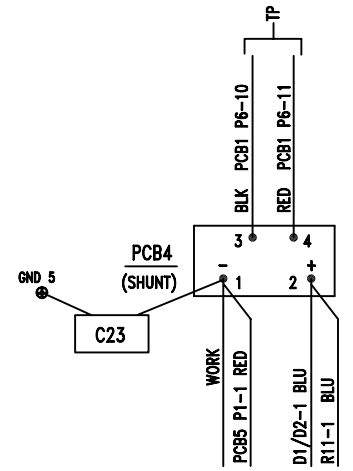

VIEW B-B

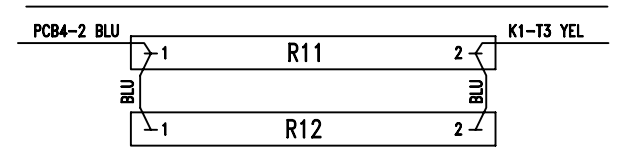

VIEW F-F

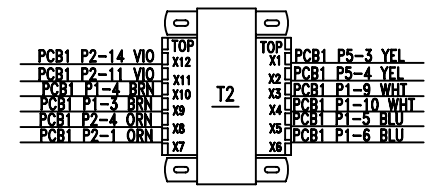

VIEW C-C

TOP AND BOTTOM

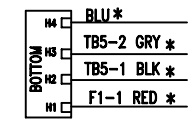

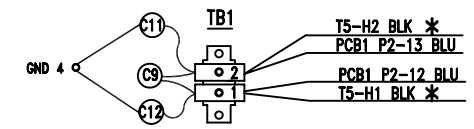

VIEW D-D

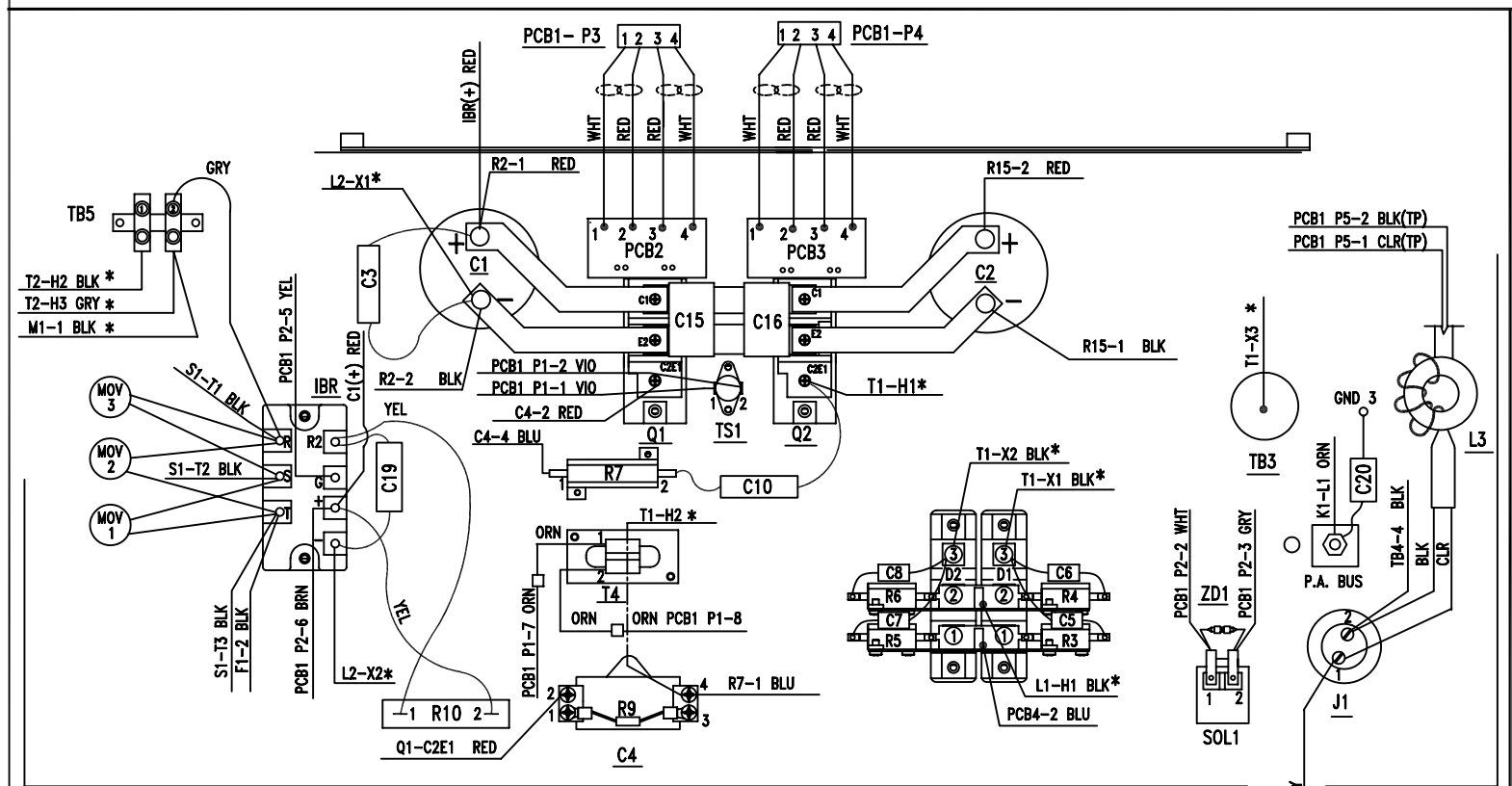

LEFT SIDE VIEW

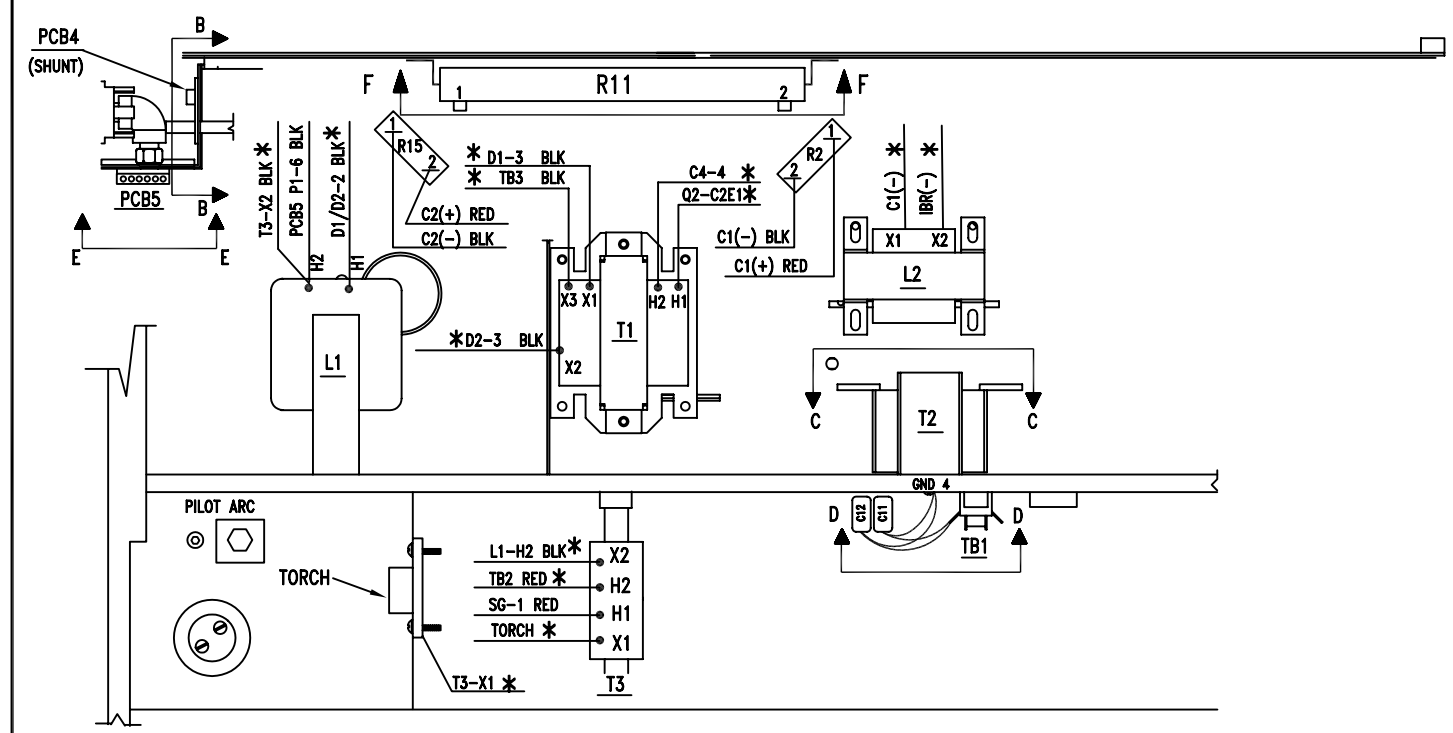

RIGHT SIDE VIEW

SHEET 2 OF 2

M	LTR	CHANGE	BY	DATE	CHK'D
		SEE SHEET ONE			

ENGLISH DWG.
UNLESS OTHERWISE SPECIFIED, DIM ARE IN INCHES.
TOL. .XX ±
.XXX ±
ANGLES ±
CHAMFERS & C'SINKS ±2°
SURFACE ROUGHNESS IS IN MICROINCHES. ✓
REMOVE ALL BURRS
BREAK SHARP EDGES

PA-6900-98-16 REV 1 — 06/26/98
RELEASED FOR — DATE

ESAB WELDING & CUTTING PRODUCTS
FLORENCE, SC 29501

TITLE
WIRING PCM 1125 208/230V, 1/3PH

REPRO MADE FROM
SCALE NONE — SIMILAR TO D-36595
FIRST MADE FOR PCM 1125 — SUP.

DRAWN	CHECKED	APPROVED	SUP. BY
BY JVB	BY WJB	BY KAM	
DATE 07/27/98	DATE 07/27/98	DATE 07/27/98	D-37568

OCT 1995

D-0558001240

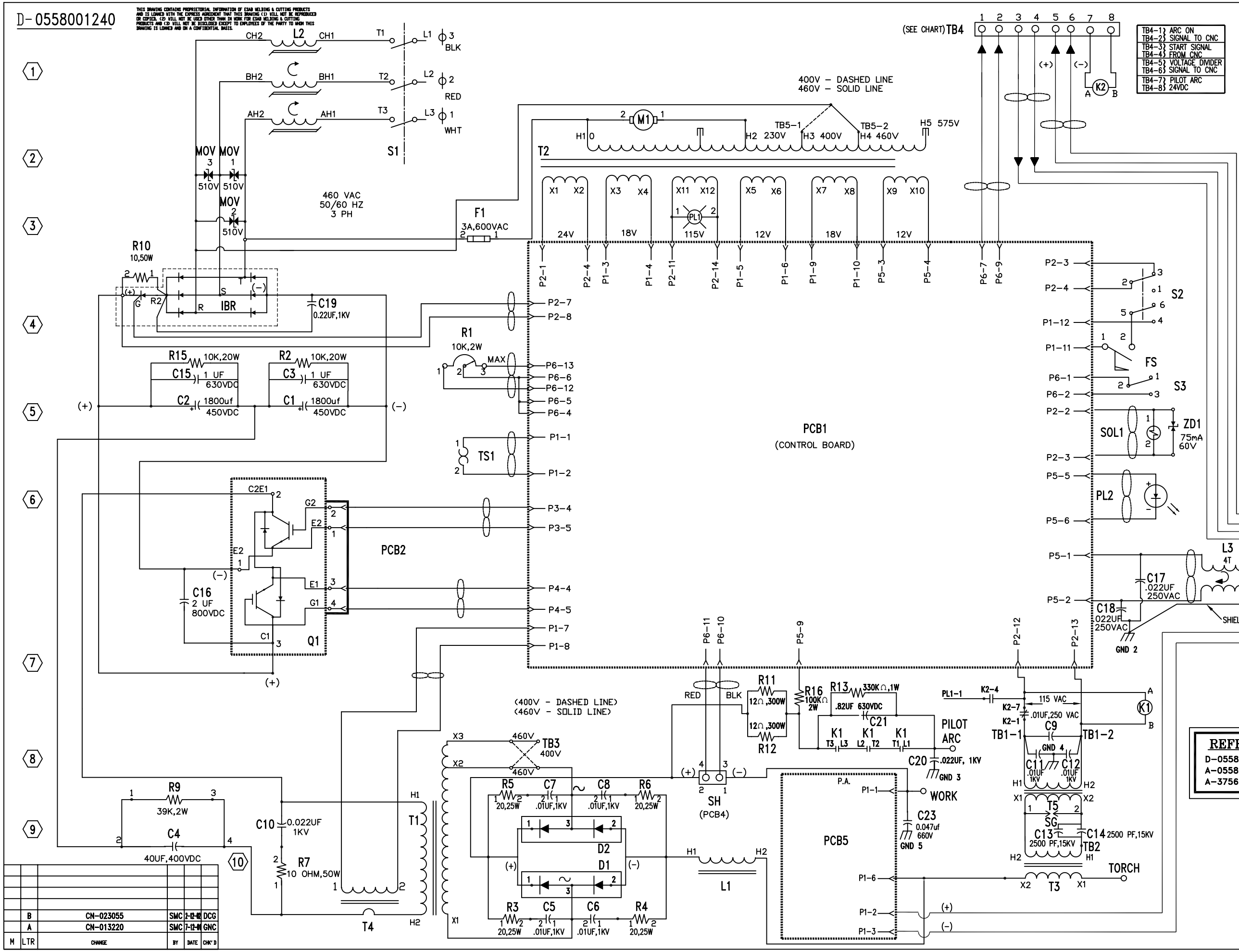

COMPONENT LEGEND

LOCATION NUMBER	ITEM	DESCRIPTION
1	S1	SWITCH 60A 600V
	M1	FAN MOTOR
	L2	3% 3 PHASE LINE REACTOR
	TB4	TERMINAL BOARD
	TB5	TERMINAL BOARD
2	T2	CONTROL TRANSFORMER
	F1	FUSE, FAST-ACTING,3A,600VAC
	PL1	PILOT LIGHT 125V
3	IBR	BRIDGE DIODE MODULE,3PH,75A,1600V
	S2	SWITCH,TOGGLE,DPDT (AIR CHECK)
	FS	FLOW SWITCH
4	S3	SWITCH, TOGGLE (LOCK-IN)
	R1	POTENTIOMETER 10K 2W
5	SOL1	SOLENOID, SWITCH (GAS)
	TS1	THERMAL SWITCH 90°C
	PCB1	CONTROL P/C BOARD
	PL2	PILOT LIGHT LED 12V
6	Q1	IGBT MODULE, 1200V,200A
	PCB2	IGBT DRIVER P/C BOARD
	L3	INDUCTOR
	J1	RECEPTACLE, 2-POLE
7	TB1	TERMINAL BOARD
	TB3	TIE POINT
	K1	CONTACTOR 40A 120VAC
8	SH	SHUNT P/C BOARD (PCB4)
	T5	HIGH VOLTAGE IGNITER
	PCB5	START-UP P/C BOARD
9	T1	MAIN TRANSFORMER
	D1,D2	DIODE MOD. 100ADC,100NS,600V
	TB2	TIE POINT
10	LI	INDUCTOR
	T3	REACTOR ASSY.
	T4	CURRENT TRANSFORMER

REFERENCE DRAWINGS:

D-0558001243 WIRING DIAGRAM 460V 3PH
A-0558001245 WIRE KIT MAIN
A-37565 WIRE KIT PRIM 460V 3PH

M	LTR	CHANGE	BY	DATE	CHK'D
	B	CN-023055	SMC	2-12-02	DCG
	A	CN-013220	SMC	7-12-00	GNC

ENGLISH DWG.
UNLESS OTHERWISE SPECIFIED, DIM ARE IN INCHES.
TOL .XX ± .015
.XXX ± .005
ANGLES ± 1°
SURFACE ROUGHNESS IS IN MICROINCHES.
ROUGHNESS √
REMOVE ALL BURRS
BREAK SHARP EDGES

CN-993221 | 6/14/99
RELEASED FOR | DATE

ESAB WELDING & CUTTING PRODUCTS
FLORENCE SC 29501

TITLE
SCHEM PCM 1125A 400/460V 3P

REPRO MADE FROM
SCALE NONE | SIMILAR TO
FIRST MADE FOR PCM 1125 | SUP.
SUP. BY

DRAWN	CHECKED	APPROVED
BY MWM	BY WJB	BY WH
DATE 6/25/99	DATE 7/8/99	DATE 7/8/99

D-0558001240

OCT 1998

D-0558001243

BILL OF MATERIALS

QUANTITIES ARE IN U/M ESTABLISHED BY INVENTORY

SYMBOL	ITEM NO.	PART OR CODE NO.	QTY.	DESCRIPTION

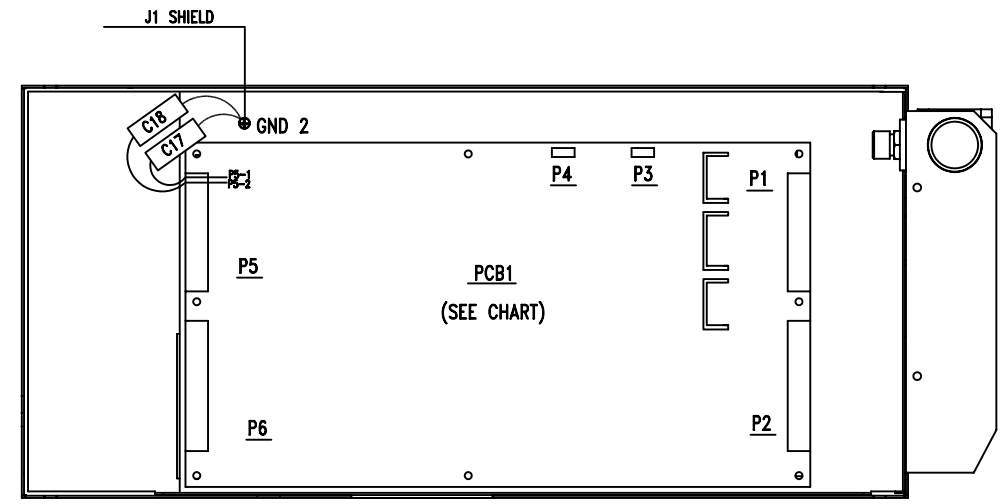

DETAIL "A" (PCB1)

P1			P2			P5			P6		
1	TS1-1	VIO	1	T2-X1	ORN*	1	J1-1	CLR (TP)	1	S3-1	BLU
2	TS1-2	VIO	2	SOL1-1	WHT	2	J1-2	BLK (TP)	2	S3-2	BLU
3	T2-X3	BRN *	3	SOL1-2	GRY	3	T2-X9	YEL*	3	——	——
4	T2-X4	BRN *	3	S2-3	GRY	4	T2-X10	YEL*	4	PCB1 P6-5	WHT
5	T2-X5	BLU *	4	T2-X2	ORN*	5	PL2-(+)	RED	5	PCB1 P6-4	WHT
6	T2-X6	BLU *	4	S2-2	ORN	6	PL2-(-)	BLK		PCB1 P6-6	WHT
7	T4-1	ORN	5	——	——				6	R1-2	WHT
8	T4-2	ORN	6	——	——	7	——	——		PCB1 P6-5	WHT
9	T2-X7	WHT *	7	IBR-G	YEL	8	——	——	7	TB4-1	YEL
10	T2-X8	WHT *	8	IBR(+)	BRN	9	R16-1	GRY	8	——	——
11	FS-1	RED	9	——	——	10	——	——	8	——	——
12	S2-4	BLK	10	——	——	11	——	——	9	TB4-2	ORN
			11	T2-X11	VIO *	12	——	——	10	PCB4-3	BLK (TP)
			11	PL1-1	BRN						
			12	K2-7	BLK				11	PCB4-4	RED (TP)
			12	K1-A	BLU				12	R1-1	BRN
			13	TB1-2	BLU				13	R1-3	RED
			13	K1-B	BLU				14	——	——
			14	PL1-2	YEL						
			14	T2-X12	VIO *						

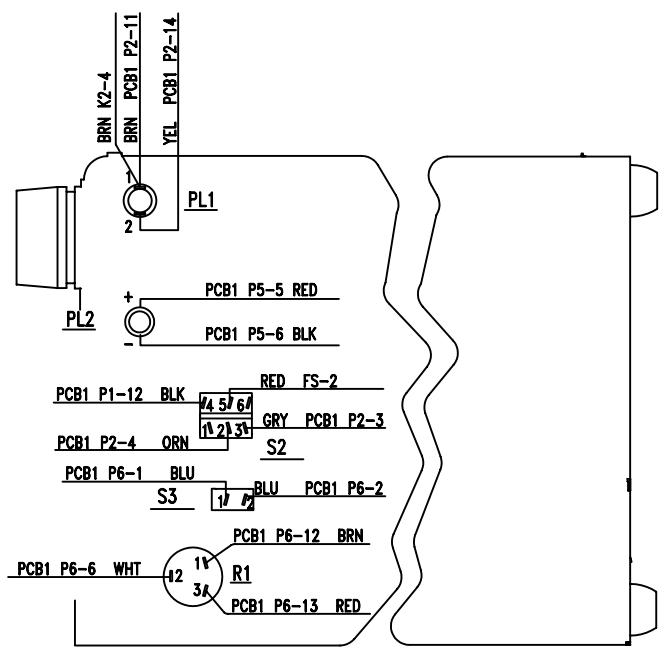

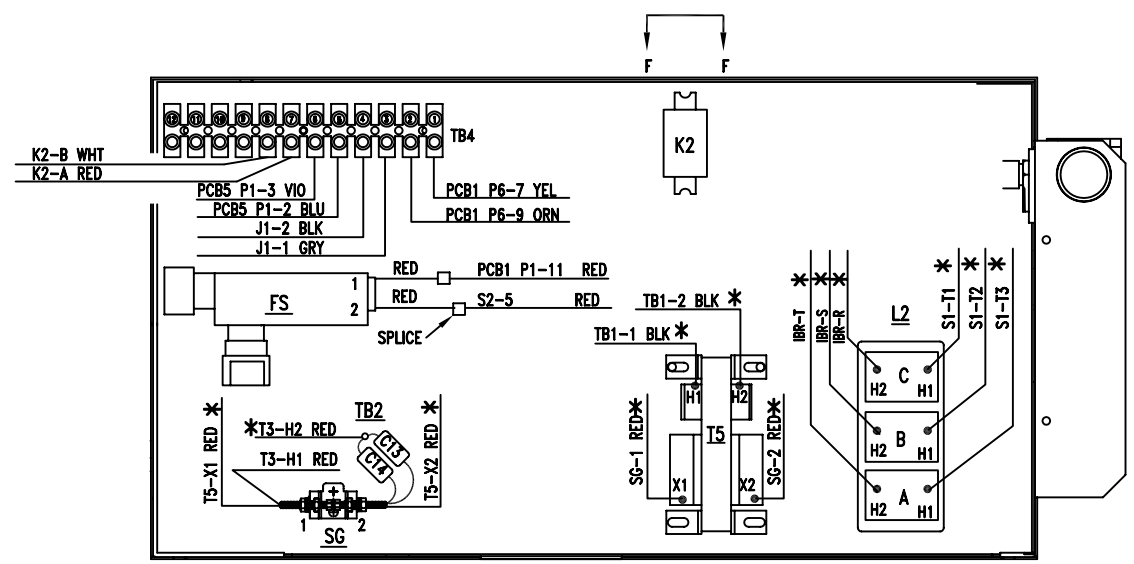

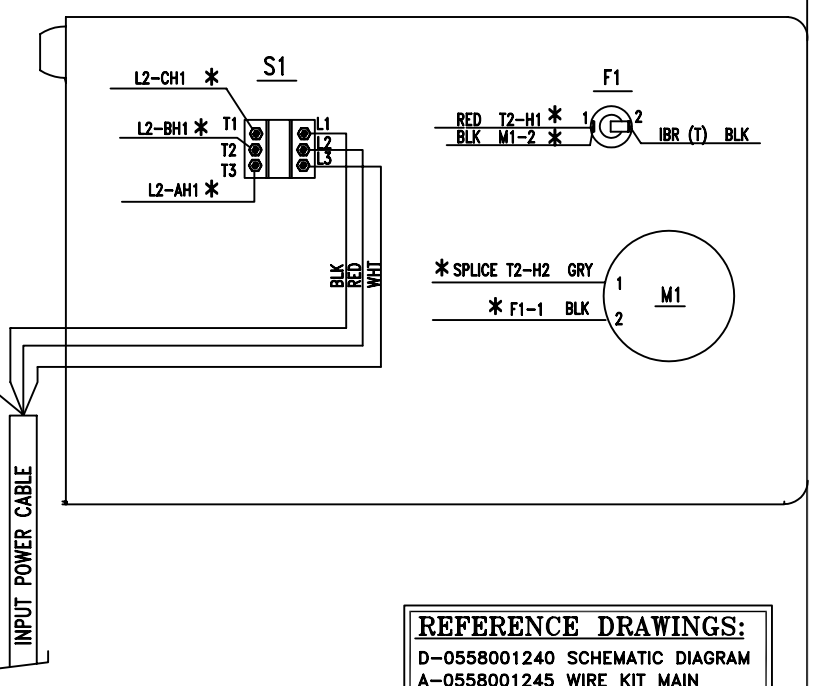

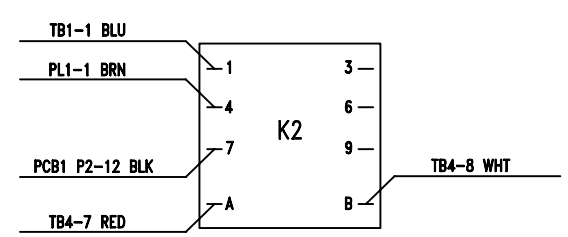

VIEW F

REFERENCE DRAWINGS:

D-0558001240 SCHEMATIC DIAGRAM
A-0558001245 WIRE KIT MAIN
A-37565 WIRE KIT 460V

NOTES:
1- * DENOTES SELF LEADS.
2- * (TP) DENOTES TWISTED PAIR.

SHEET 1 OF 2

M	LTR	CHANGE	BY	DATE	CHK'D
	B	CN-023055	SMC	2-12-02	DCG
	A	CN-013220	SMC	7-12-01	GNC

ENGLISH DWG. UNLESS OTHERWISE SPECIFIED, DIM ARE IN INCHES.
TOL .XX ±
.XXX ±
ANGLES ±
CHAMFERS & C'SINKS ±2°
SURFACE ROUGHNESS IS IN MICROINCHES.
REMOVE ALL BURRS
BREAK SHARP EDGES

CN-993221 — RELEASED FOR — 6/14/99 DATE

ESAB WELDING & CUTTING PRODUCTS
FLORENCE, SC 29501

TITLE: WIRING PCM 1125A 400/460V 3PH

REPRO MADE FROM
SCALE NONE
SIMILAR TO
FIRST MADE FOR PCM 1125
SUP.
SUP. BY

DRAWN	CHECKED	APPROVED
BY MMM	BY WJB	BY WH
DATE 6/25/99	DATE 7/8/99	DATE 7/8/99

D-0558001243

OCT 1995

D-0558001243

BILL OF MATERIALS

QUANTITIES ARE IN U/M ESTABLISHED BY INVENTORY

SYMBOL	ITEM NO.	PART OR CODE NO.	QTY.	DESCRIPTION

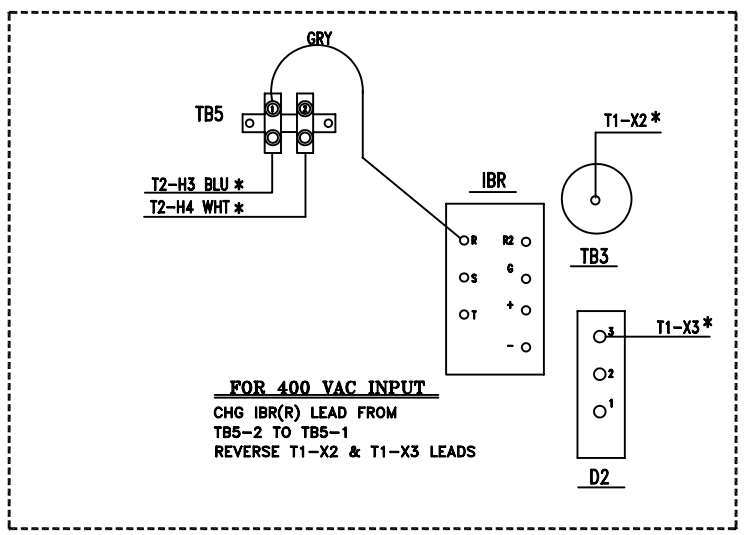

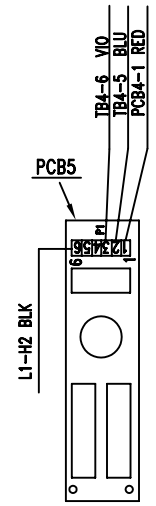

VIEW E-E

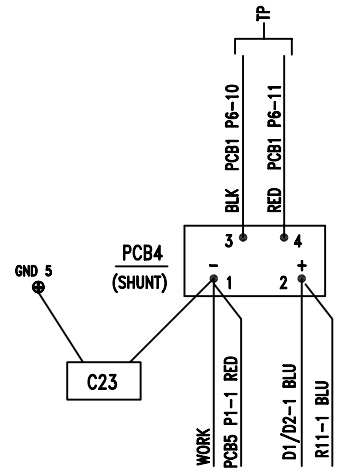

VIEW B-B

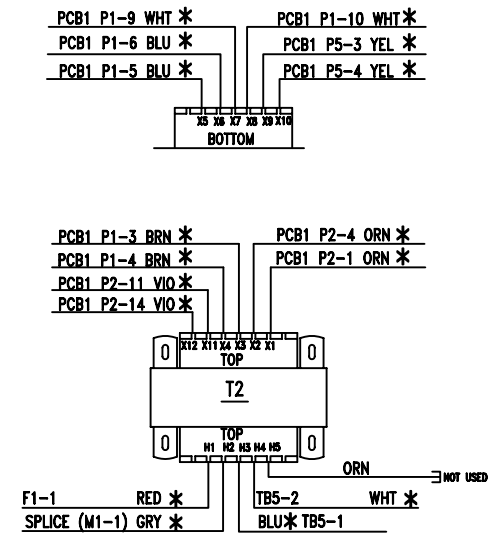

VIEW C-C

TOP AND BOTTOM

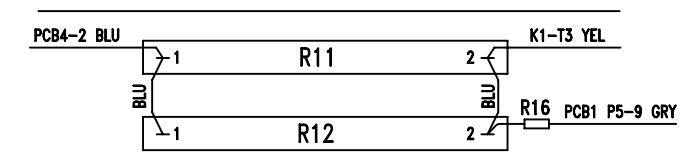

VIEW F-F

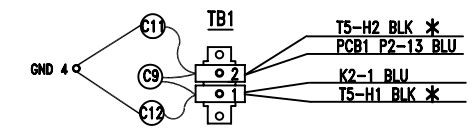

VIEW D-D

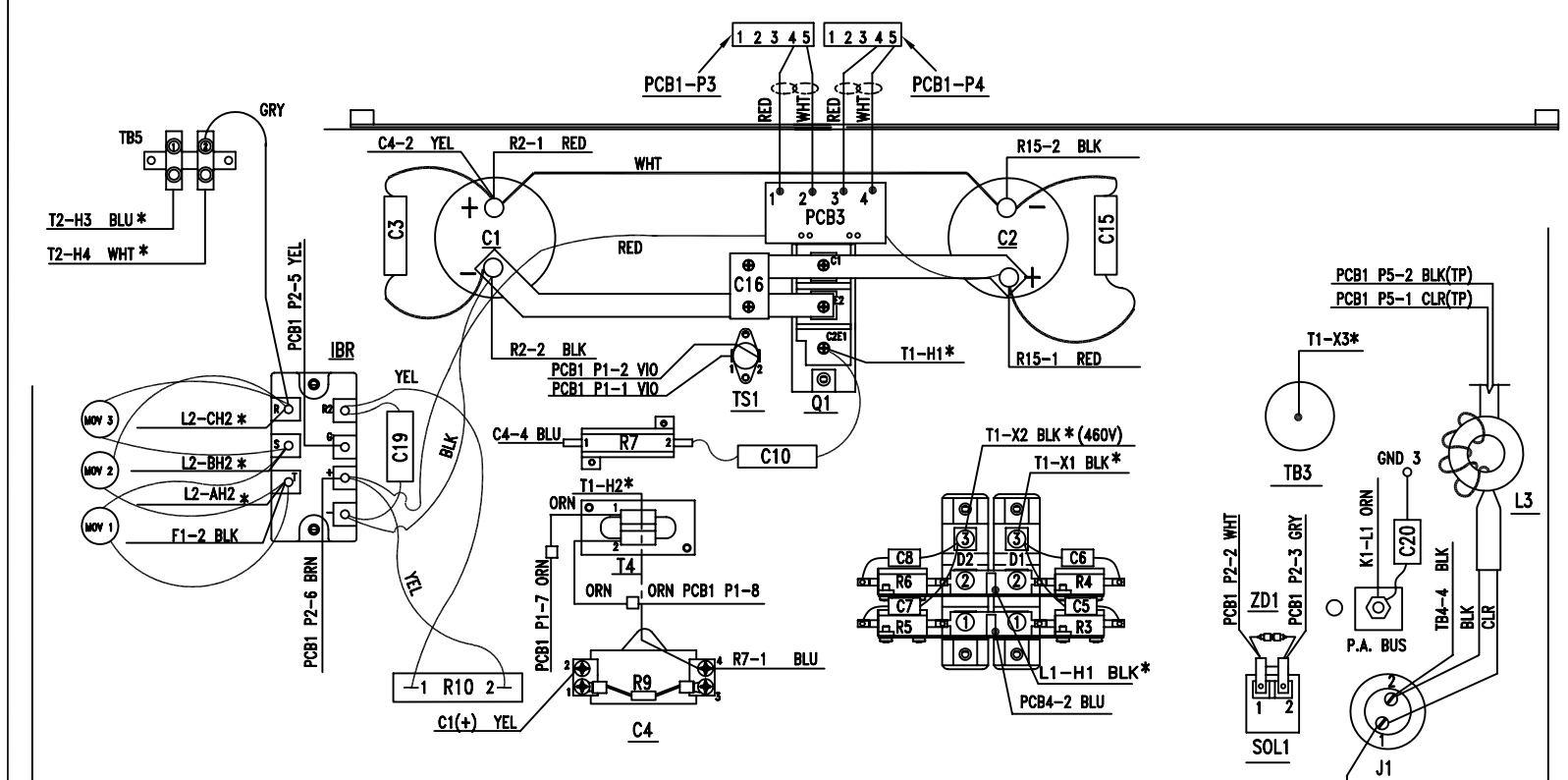

LEFT SIDE VIEW

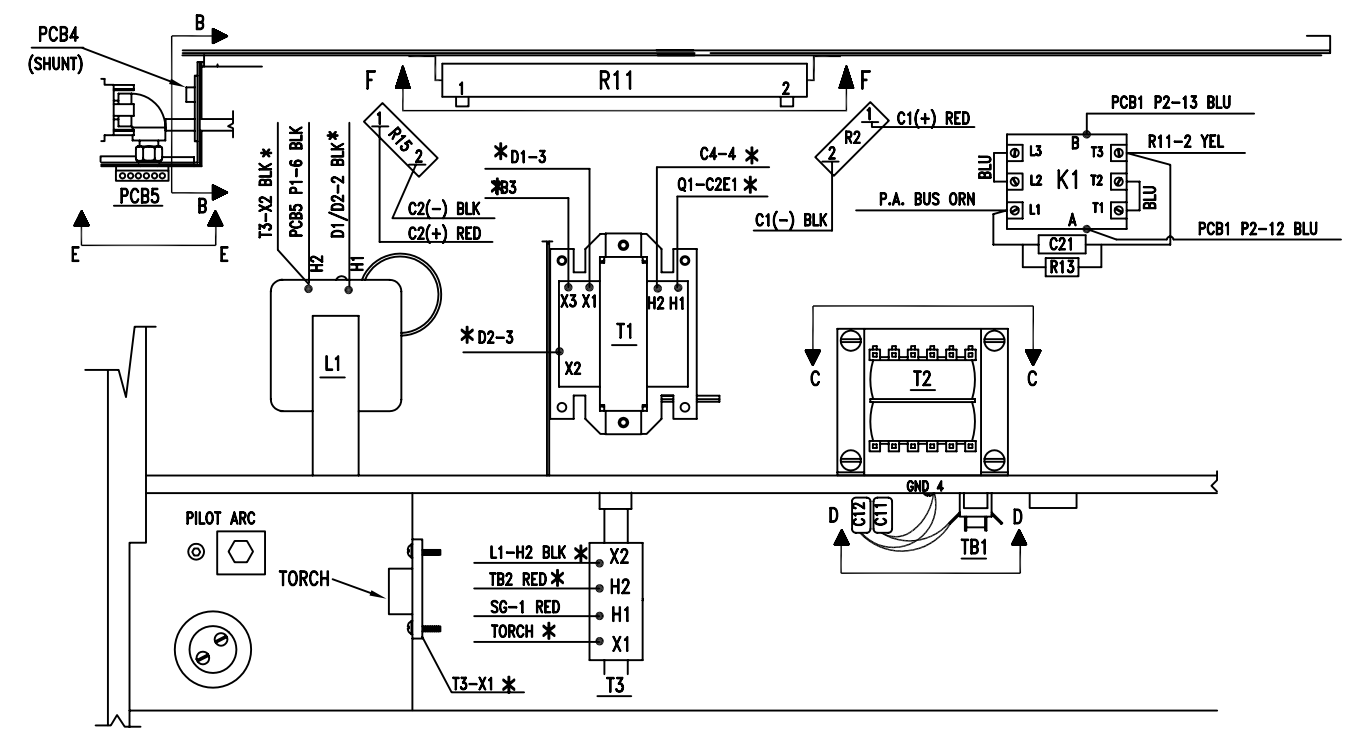

RIGHT SIDE VIEW

SHEET 2 OF 2

	B	SEE SHEET ONE			
M	LTR	CHANGE	BY	DATE	CHK'D

ENGLISH DWG.
UNLESS OTHERWISE SPECIFIED, DIM ARE IN INCHES.
TOL. .XX ±
.XXX ±
ANGLES ±
CHAMFERS & C' SINKS ±2°
SURFACE ROUGHNESS IS IN MICROINCHES. ✓
REMOVE ALL BURRS
BREAK SHARP EDGES

CN-993221 — 6/14/99
RELEASED FOR — DATE

ESAB WELDING & CUTTING PRODUCTS
FLORENCE, SC 29501

TITLE
WIRING PCM 1125A 400/460V 3PH

REPRO MADE FROM
SIMILAR TO

SCALE NONE
FIRST MADE FOR PCM 1125
SUP.
SUP. BY

DRAWN	CHECKED	APPROVED
BY MWM	BY WJB	BY WH
DATE 6/25/99	DATE 7/8/99	DATE 7/8/99

D-0558001243

OCT 1995

D-37569

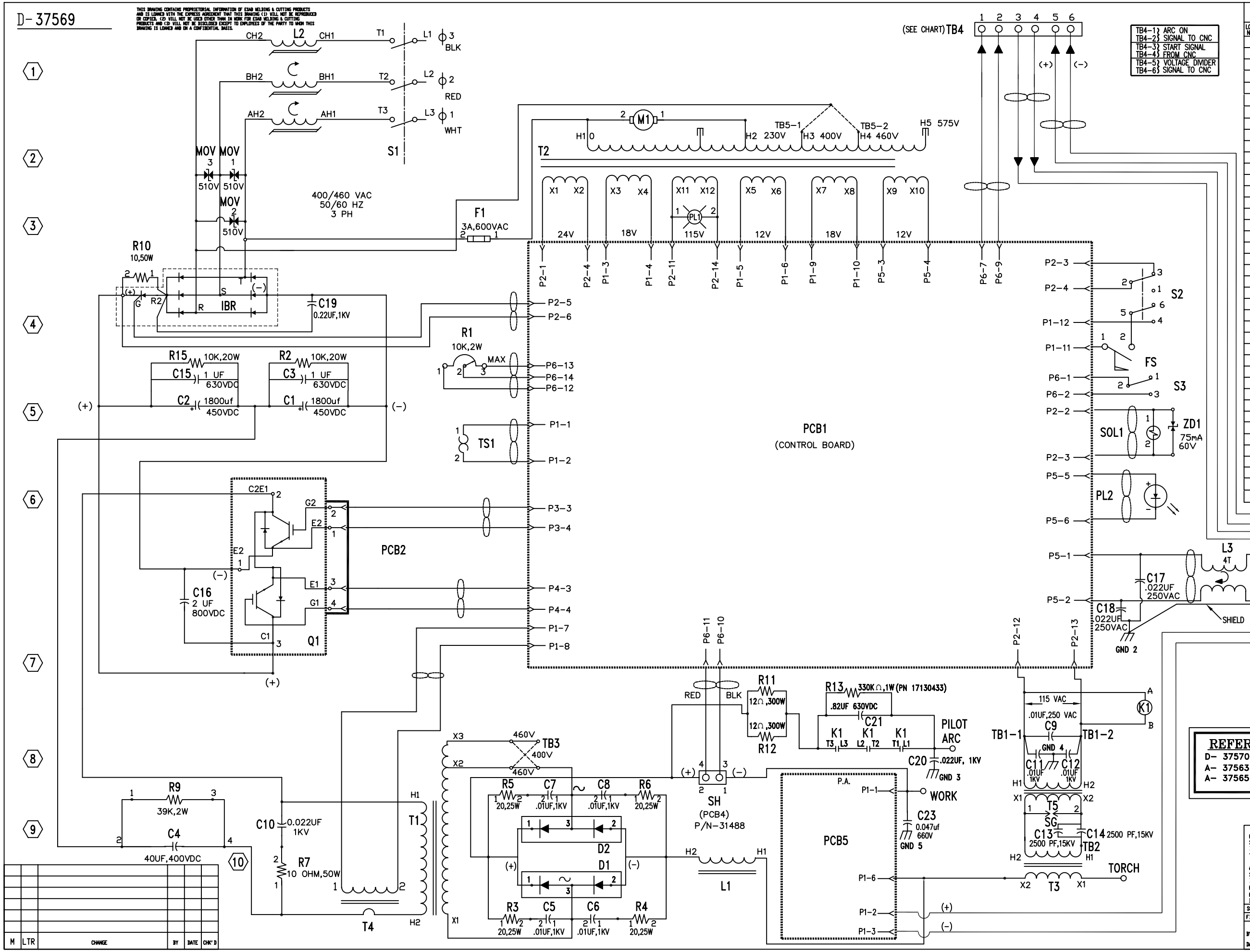

COMPONENT LEGEND

LOCATION NUMBER	ITEM	DESCRIPTION
1	S1	SWITCH 60A 600V
	M1	FAN MOTOR
	L2	3% 3 PHASE LINE REACTOR
	TB4	TERMINAL BOARD
	TB5	TERMINAL BOARD
2	T2	CONTROL TRANSFORMER
	F1	FUSE, FAST-ACTING,3A,600VAC
	PL1	PILOT LIGHT 125V
3	IBR	BRIDGE DIODE MODULE,3PH,75A,1600V
	S2	SWITCH,TOGGLE,DPDT (AIR CHECK)
	FS	FLOW SWITCH
4	S3	SWITCH, TOGGLE (LOCK-IN)
	R1	POTENTIOMETER 10K 2W
5	SOL1	SOLENOID, SWITCH (GAS)
	TS1	THERMAL SWITCH 90°C
	PCB1	CONTROL P/C BOARD
	PL2	PILOT LIGHT LED 12V
6	Q1	IGBT MODULE, 1200V,200A
	PCB2	IGBT DRIVER P/C BOARD
	L3	INDUCTOR
	J1	RECEPTACLE, 2-POLE
7	TB1	TERMINAL BOARD
	TB3	TIE POINT
	K1	CONTACTOR 40A 120VAC
8	SH	SHUNT P/C BOARD (PCB4)
	T5	HIGH VOLTAGE IGNITER
	PCB5	START-UP P/C BOARD
9	T1	MAIN TRANSFORMER
	D1,D2	DIODE MOD. 100ADC,100NS,600V
	TB2	TIE POINT
10	LI	INDUCTOR
	T3	REACTOR ASSY.
	T4	CURRENT TRANSFORMER

REFERENCE DRAWINGS:

D- 37570 WIRING DIAGRAM 400/460V 3PH
A- 37563 WIRE KIT MAIN
A- 37565 WIRE KIT PRIM 400/460V 3PH

M	LTR	CHANGE	BY	DATE	CHK'D

ENGLISH DWG.
UNLESS OTHERWISE SPECIFIED, DIM ARE IN INCHES.
TOL .XX ± .015
.XXX ± .005
ANGLES ± 1°
SURFACE ROUGHNESS IS IN MICROINCHES.
ROUGHNESS √
REMOVE ALL BURRS
BREAK SHARP EDGES

PA-6900-98-16 REV 1 — 06/26/98
RELEASED FOR — DATE

ESAB WELDING & CUTTING PRODUCTS
FLORENCE SC 29501

TITLE
SCHEMATIC PCM 1125 400/460V 3P

REPRO MADE FROM
SCALE NONE
SIMILAR TO
FIRST MADE FOR PCM 1125
SUP.

DRAWN	CHECKED	APPROVED	SUP. BY
BY JVB	BY WJB	BY KAM	
DATE 02/27/98	DATE 02/27/98	DATE 02/27/98	

D-37569

OCT 1995

D-37570

BILL OF MATERIALS

QUANTITIES ARE IN U/M ESTABLISHED BY INVENTORY

SYMBOL	ITEM NO.	PART OR CODE NO.	QTY.	DESCRIPTION

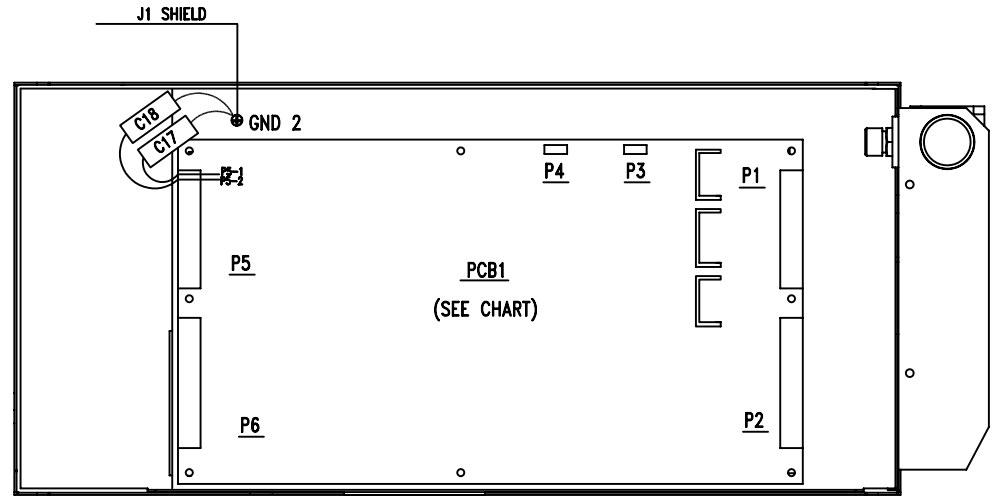

DETAIL "A" (PCB1)

P1			P2			P5			P6		
1	TS1-1	VIO	1	T2-X1	ORN*	1	J1-1	CLR (TP)	1	S3-1	BLU
2	TS1-2	VIO	2	SOL1-1	WHT	2	J1-2	BLK (TP)	2	S3-2	BLU
3	T2-X3	BRN *	3	SOL1-2	GRY	3	T2-X9	YEL*	3	——	—
4	T2-X4	BRN *	3	S2-3	GRY	4	T2-X10	YEL*	4	——	—
5	T2-X5	BLU *	4	T2-X2	ORN*	5	PL2-(+)	RED	5	——	—
6	T2-X6	BLU *	4	S2-2	ORN	6	PL2-(-)	BLK	6	——	—
7	T4-1	ORN	5	IBR-G	YEL		PCB1 P6-10	BLK	7	TB4-1	YEL
8	T4-2	ORN	6	IBR(+)	BRN	7	——	—	8	——	—
9	T2-X7	WHT*	7	——	—	8	——	—	8	——	—
10	T2-X8	WHT*	8	——	—	9	——	—	9	TB4-2	ORN
11	FS-1	RED	9	——	—	10	——	—	10	PCB4-3	BLK (TP)
12	S2-4	BLK	10	——	—	11	——	—		PCB1 P5-6	BLK
			11	T2-X11	VIO *	12	——	—	11	PCB4-4	RED (TP)
			11	PL1-1	YEL				12	R1-1	BRN
			12	TB1-1	BLU				13	R1-3	RED
			12	K1-A	BLU				14	R1-2	WHT
			13	TB1-2	BLU						
			13	K1-B	BLU						
			14	PL1-2	YEL						
			14	T2-X12	VIO *						

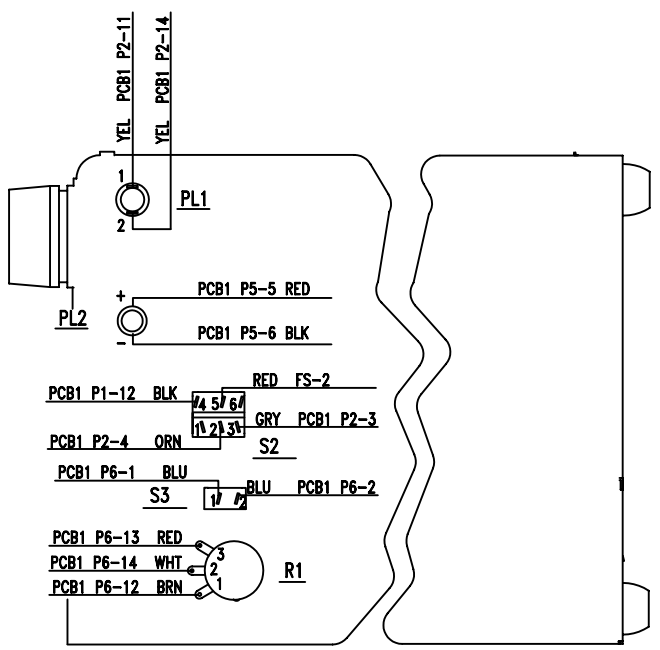

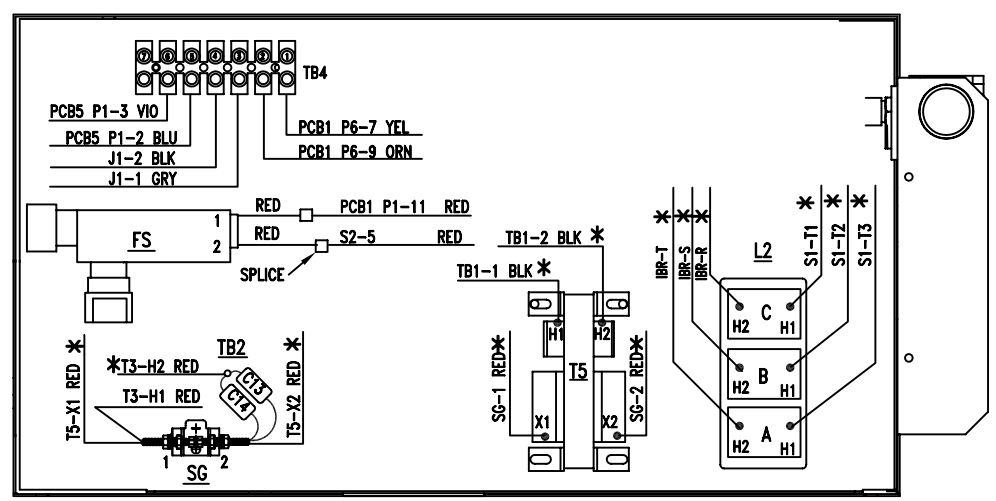

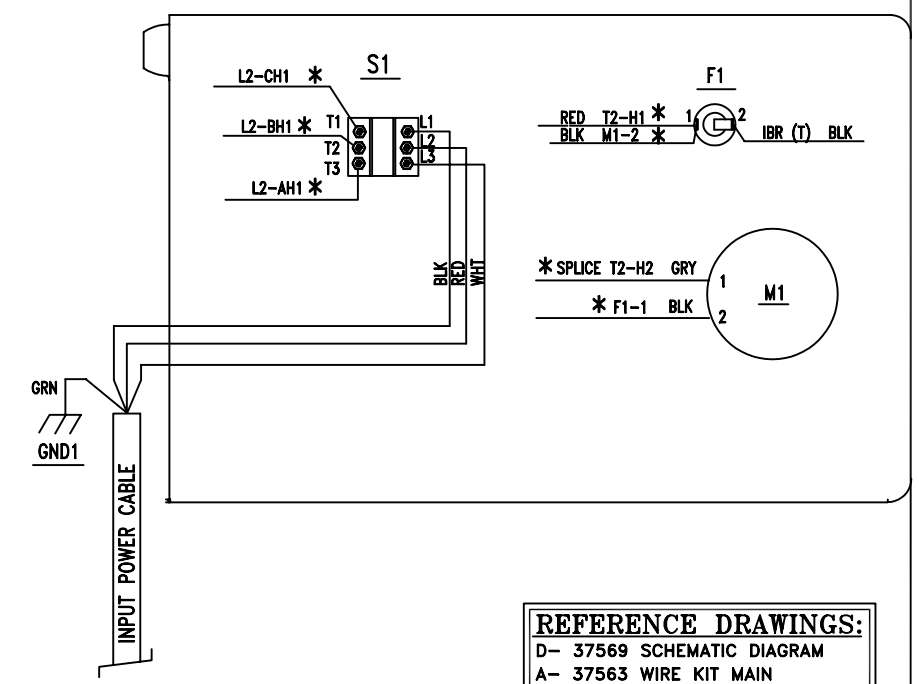

REFERENCE DRAWINGS:

D- 37569 SCHEMATIC DIAGRAM
A- 37563 WIRE KIT MAIN
A- 37565 WIRE KIT 460V

NOTES:
1- * DENOTES SELF LEADS.
2- * (TP) DENOTES TWISTED PAIR.

SHEET 1 OF 2

M	LTR	CHANGE	BY	DATE	CHK'D

ENGLISH DWG.
UNLESS OTHERWISE SPECIFIED, DIM ARE IN INCHES.
TOL .XX ±
.XXX ±
ANGLES ±
CHAMFERS & C'SINKS ±2°
SURFACE ROUGHNESS IS IN MICROINCHES.
REMOVE ALL BURRS
BREAK SHARP EDGES

PA-6900-98-16 REV 1 — RELEASED FOR — 06/26/98 — DATE

ESAB WELDING & CUTTING PRODUCTS
FLORENCE, SC 29501

TITLE: WIRING PCM 1125 460V 3PH

REPRO MADE FROM
SCALE NONE
SIMILAR TO
FIRST MADE FOR PCM 1125
SUP.
SUP. BY

DRAWN	CHECKED	APPROVED
BY JVB	BY WJB	BY KAM
DATE 02/27/98	DATE 02/27/98	DATE 02/27/98

D-37570

OCT 1995

D-37570

BILL OF MATERIALS

QUANTITIES ARE IN U/M ESTABLISHED BY INVENTORY

SYMBOL	ITEM NO.	PART OR CODE NO.	QTY.	DESCRIPTION

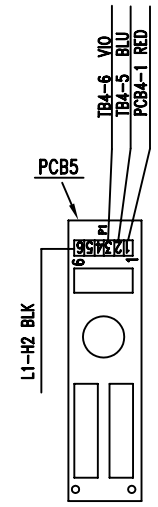

VIEW E-E

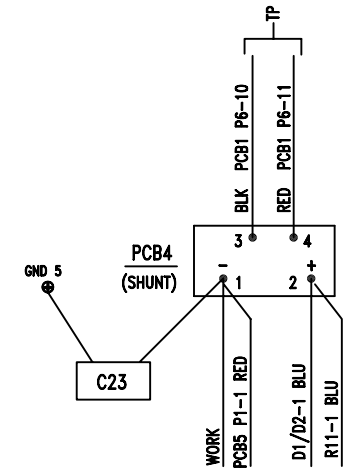

VIEW B-B

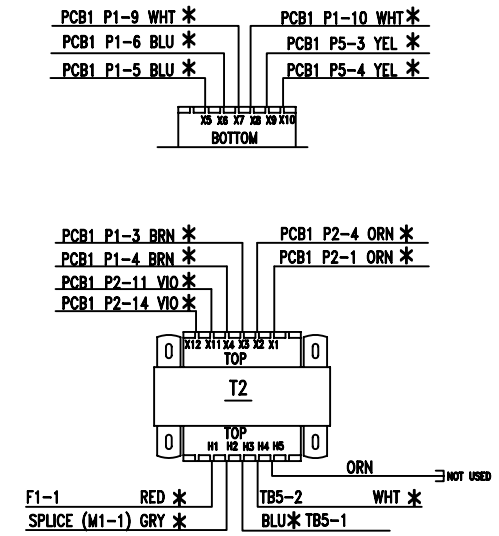

VIEW C-C

TOP AND BOTTOM

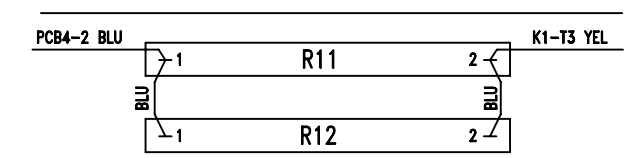

VIEW F-F

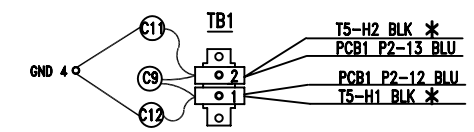

VIEW D-D

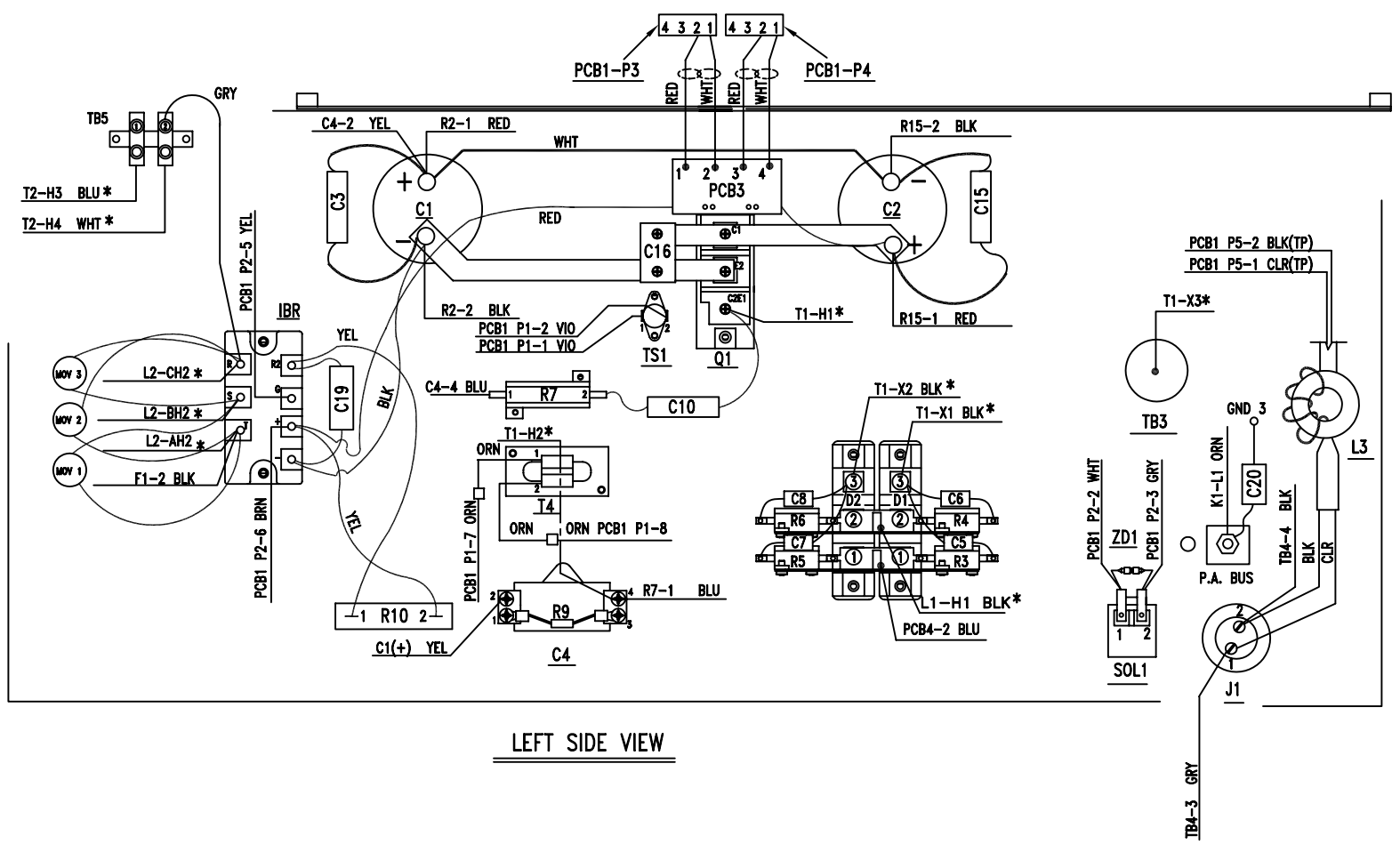

LEFT SIDE VIEW

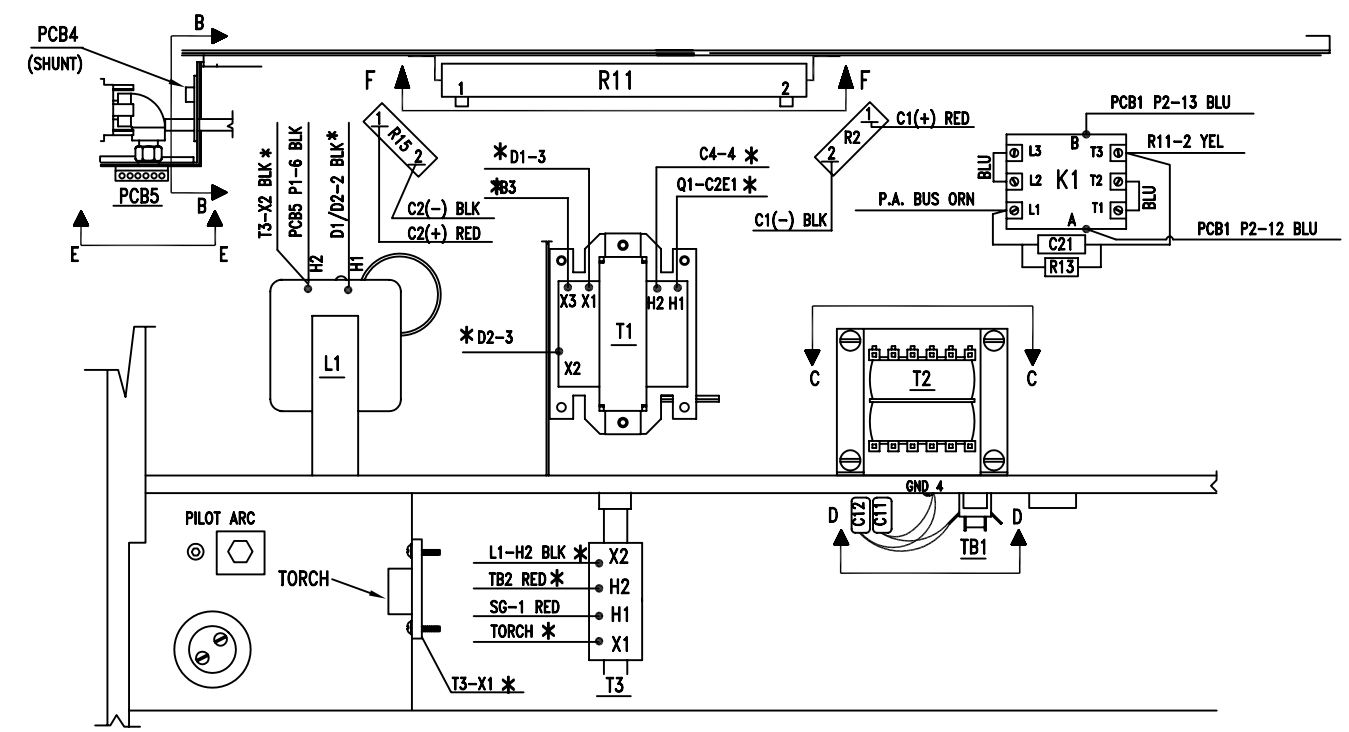

RIGHT SIDE VIEW

SHEET 2 OF 2

M	LTR	CHANGE	BY	DATE	CHK'D
		SEE SHEET ONE			

ENGLISH DWG. UNLESS OTHERWISE SPECIFIED, DIM ARE IN INCHES.
TOL .XX ± .XXX ± ANGLES ±
CHAMFERS & C'SINKS ±2°
SURFACE ROUGHNESS IS IN MICROINCHES.
REMOVE ALL BURRS BREAK SHARP EDGES

PA-6900-98-16 REV 1 — RELEASED FOR — 06/26/98 — DATE

ESAB WELDING & CUTTING PRODUCTS
FLORENCE, SC 29501

TITLE: WIRING PCM 1125 460V 3PH

REPRO MADE FROM
SCALE: NONE
SIMILAR TO
FIRST MADE FOR PCM 1125
SUP.
SUP. BY

DRAWN	CHECKED	APPROVED
BY JVB	BY WJB	BY KAM
DATE 02/27/98	DATE 02/27/98	DATE 02/27/98

D-37570

OCT 1995

D-37571

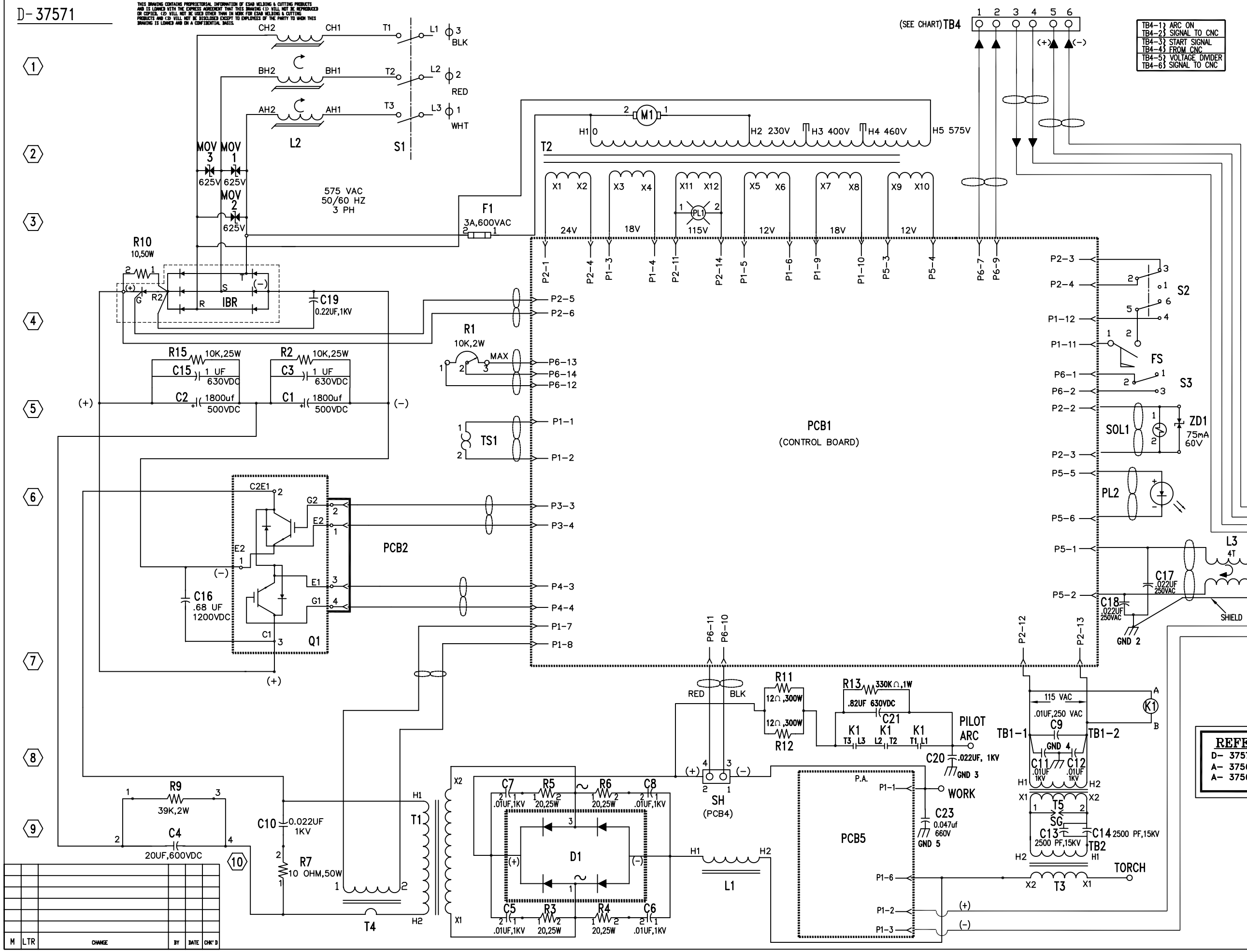

COMPONENT LEGEND

LOCATION NUMBER	ITEM	DESCRIPTION
1	S1	SWITCH 60A 600V
	M1	FAN MOTOR
	L2	3% 3 PHASE LINE REACTOR
	TB4	TERMINAL BOARD
2	PL1	PILOT LIGHT 125V
	F1	FUSE, AC FAST ACTING,3A,600VAC
	T2	CONTROL TRANSFORMER
3	IBR	BRIDGE DIODE MODULE, 3PH, 75A, 1600V
	S2	SWITCH, TOGGLE DPDT (AIR CHECK)
	FS	FLOW SWITCH
4	S3	SWITCH, TOGGLE (LOCK-IN)
	R1	POTENTIOMETER 10K 2W
5	SOL1	SOLENOID, SWITCH (GAS)
	TS1	THERMAL SWITCH 90°C
	PCB1	CONTROL P/C BOARD
6	Q1	IGBT MODULE, 1400V,200A
	PCB2	IGBT DRIVER P/C BOARD
	PL2	PILOT LIGHT, LED 12V
	J1	RECEPTACLE, 2-POLE
	L3	INDUCTOR
7	K1	CONTACTOR 40A 120VAC
	TB1	TERMINAL BOARD
8	SH	SHUNT P/C BOARD (PCB4)
	T5	HIGH VOLTAGE IGNITER
	PCB5	START-UP P/C BOARD
9	T1	MAIN TRANSFORMER
	D1,D2	DIODE MOD. 100A,600V,100NS
	TB2	TIE POINT
10	LI	INDUCTOR
	T3	REACTOR ASSY.
	T4	CURRENT TRANSFORMER

REFERENCE DRAWINGS:

D- 37572 WIRING DIAGRAM 575V 3PH
A- 37563 WIRE KIT MAIN
A- 37566 WIRE KIT PRIM 575V 3PH

M	LTR	CHANGE	BY	DATE	CHK'D

ENGLISH DWG.
UNLESS OTHERWISE SPECIFIED, DIM ARE IN INCHES.
TOL .XX ± .015
.XXX ± .005
ANGLES ± 1°
SURFACE ROUGHNESS IS IN MICROINCHES.
ROUGHNESS √
REMOVE ALL BURRS
BREAK SHARP EDGES

PA-0900-98-16 REV 1 — 06/26/98
RELEASED FOR — DATE

ESAB WELDING & CUTTING PRODUCTS
FLORENCE SC 29501

TITLE
SCHEMATIC PCM 1125 575V 3PH

REPRO MADE FROM
SCALE NONE
SIMILAR TO
FIRST MADE FOR PCM 1125
SUP.

DRAWN	CHECKED	APPROVED
BY JVB	BY WJB	BY KAM
DATE 02/27/98	DATE 02/27/98	DATE 02/27/98

SUP. BY

D-37571

OCT 1995

D-37572

BILL OF MATERIALS

QUANTITIES ARE IN U/M ESTABLISHED BY INVENTORY

SYMBOL	ITEM NO.	PART OR CODE NO.	QTY.	DESCRIPTION

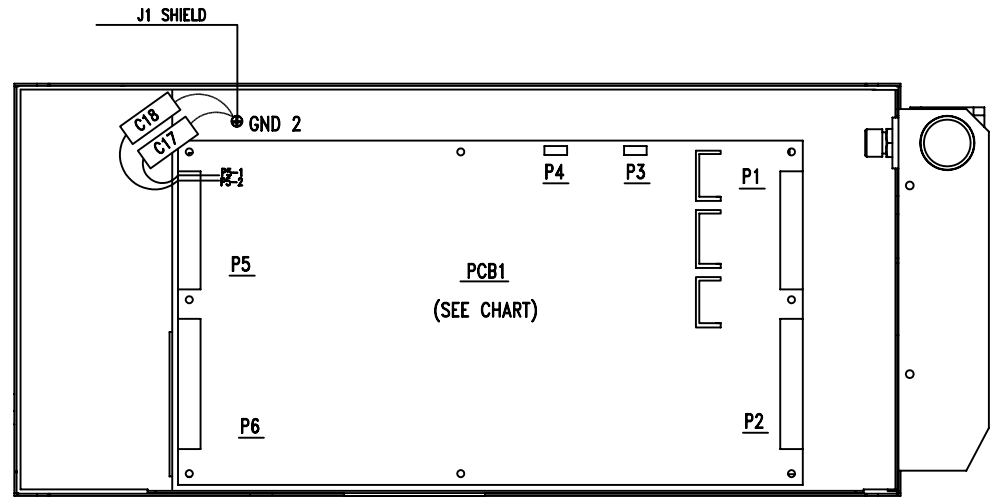

DETAIL "A" (PCB1)

P1			P2			P5			P6		
1	TS1-1	VIO	1	T2-X1	ORN*	1	J1-1	CLR (TP)	1	S3-1	BLU
2	TS1-2	VIO	2	SOL1-1	WHT	2	J1-2	BLK (TP)	2	S3-2	BLU
3	T2-X3	BRN *	3	SOL1-2	GRY	3	T2-X9	YEL*	3	——	—
4	T2-X4	BRN *	3	S2-3	GRY	4	T2-X10	YEL*	4	——	—
5	T2-X5	BLU *	4	T2-X2	ORN*	5	PL2-(+)	RED	5	——	—
6	T2-X6	BLU *	4	S2-2	ORN	6	PL2-(-)	BLK	6	——	—
7	T4-1	ORN	5	IBR-G	YEL		PCB1 P6-10	BLK	7	TB4-1	YEL
8	T4-2	ORN	6	IBR(+)	BRN	7	——	—	8	——	—
9	T2-X7	WHT*	7	——	—	8	——	—	8	——	—
10	T2-X8	WHT*	8	——	—	9	——	—	9	TB4-2	ORN
11	FS-1	RED	9	——	—	10	——	—	10	PCB4-3	BLK (TP)
12	S2-4	BLK	10	——	—	11	——	—		PCB1 P5-6	BLK
			11	T2-X11	VIO *	12	——	—	11	PCB4-4	RED (TP)
			11	PL1-1	YEL				12	R1-1	BRN
			12	TB1-1	BLU				13	R1-3	RED
			12	K1-A	BLU				14	R1-2	WHT
			13	TB1-2	BLU						
			13	K1-B	BLU						
			14	PL1-2	YEL						
			14	T2-X12	VIO *						

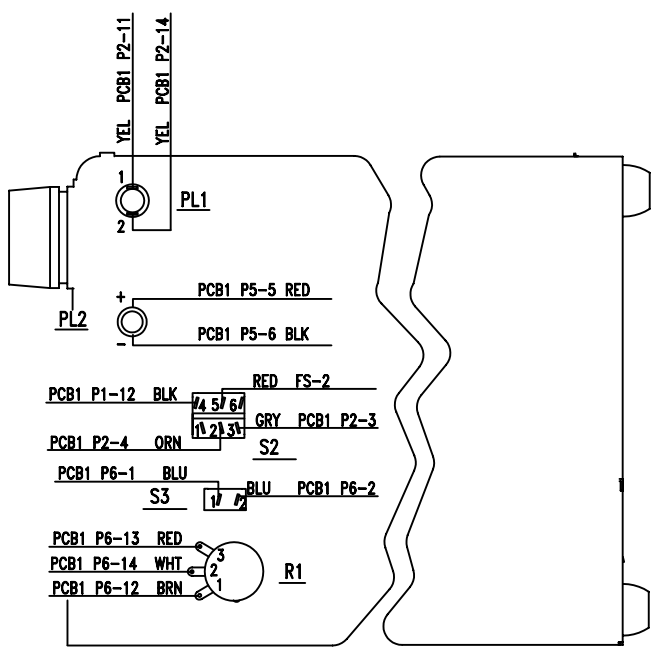

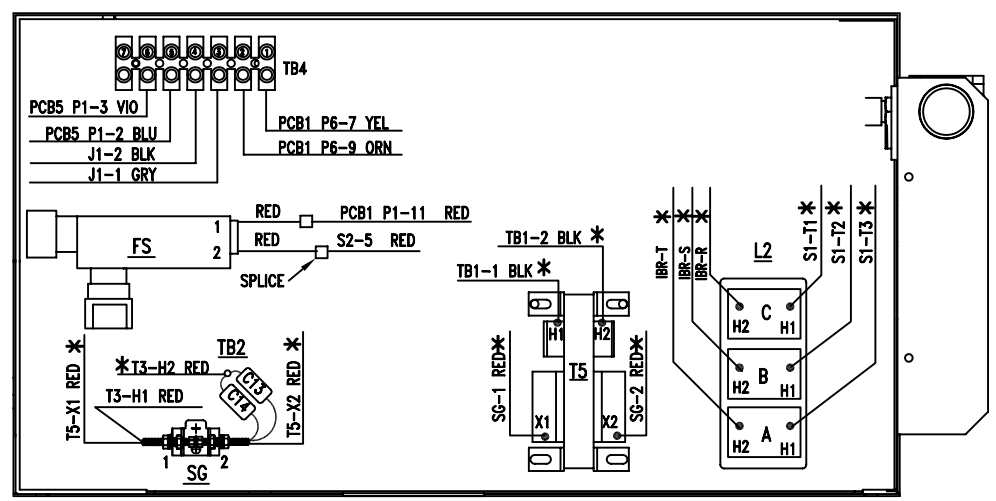

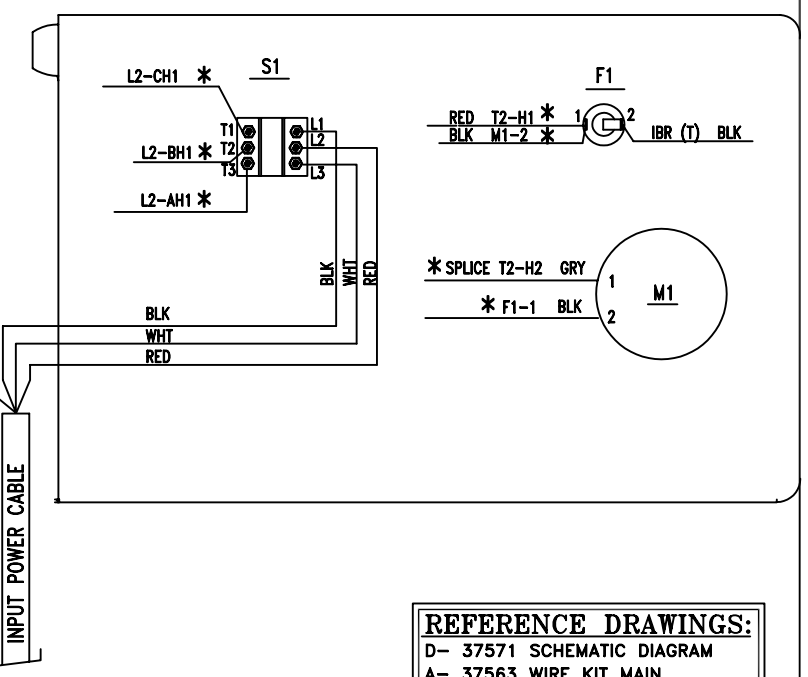

REFERENCE DRAWINGS:

D- 37571 SCHEMATIC DIAGRAM
A- 37563 WIRE KIT MAIN
A- 37566 WIRE KIT 575V

NOTES:
1- * DENOTES SELF LEADS.
2- * (TP) DENOTES TWISTED PAIR.

SHEET 1 OF 2

M	LTR	CHANGE	BY	DATE	CHK'D

ENGLISH DWG. UNLESS OTHERWISE SPECIFIED, DIM ARE IN INCHES.
TOL .XX ±
.XXX ±
ANGLES ±
CHAMFERS & C'SINKS 82°
SURFACE ROUGHNESS IS IN MICRONINCHES. ✓
REMOVE ALL BURRS
BREAK SHARP EDGES

PA-6900-98-16 REV1 — RELEASED FOR — 06/26/98 DATE

ESAB WELDING & CUTTING PRODUCTS
FLORENCE, SC 29501

TITLE: WIRING PCM 1125 575V

REPRO MADE FROM
SCALE NONE
SIMILAR TO D-36716
FIRST MADE FOR PCM 1125
SUP.
SUP. BY
DRAWN BY JVB DATE 07/27/98
CHECKED BY WJB DATE 07/27/98
APPROVED BY KAM DATE 11/19/98

D-37572

OCT 1995

D-37572

BILL OF MATERIALS

QUANTITIES ARE IN U/M ESTABLISHED BY INVENTORY

SYMBOL	ITEM NO.	PART OR CODE NO.	QTY.	DESCRIPTION

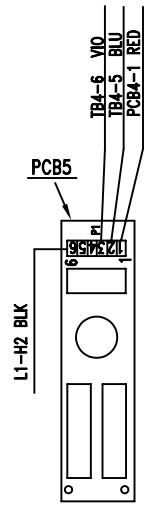

VIEW E-E

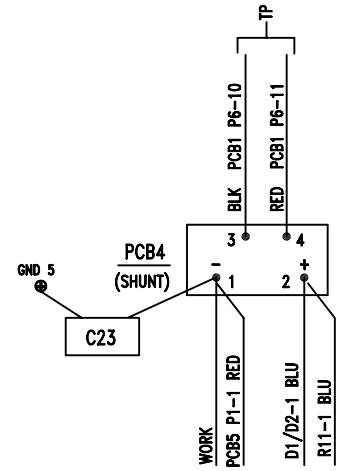

VIEW B-B

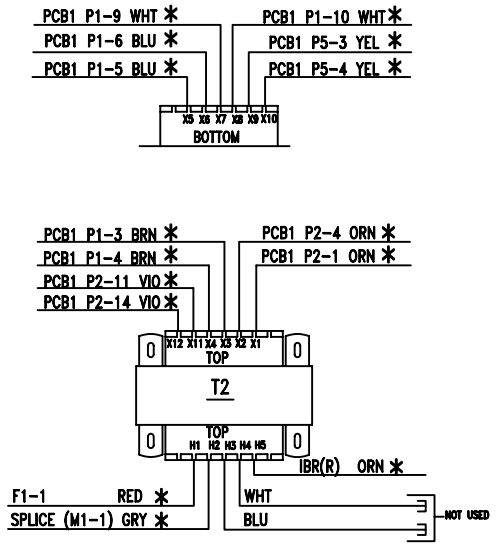

VIEW C-C

TOP AND BOTTOM

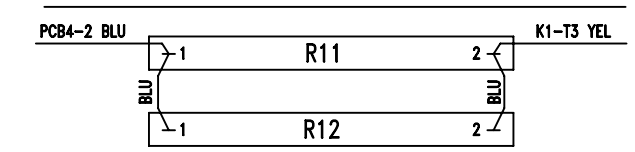

VIEW F-F

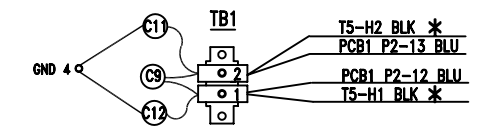

VIEW D-D

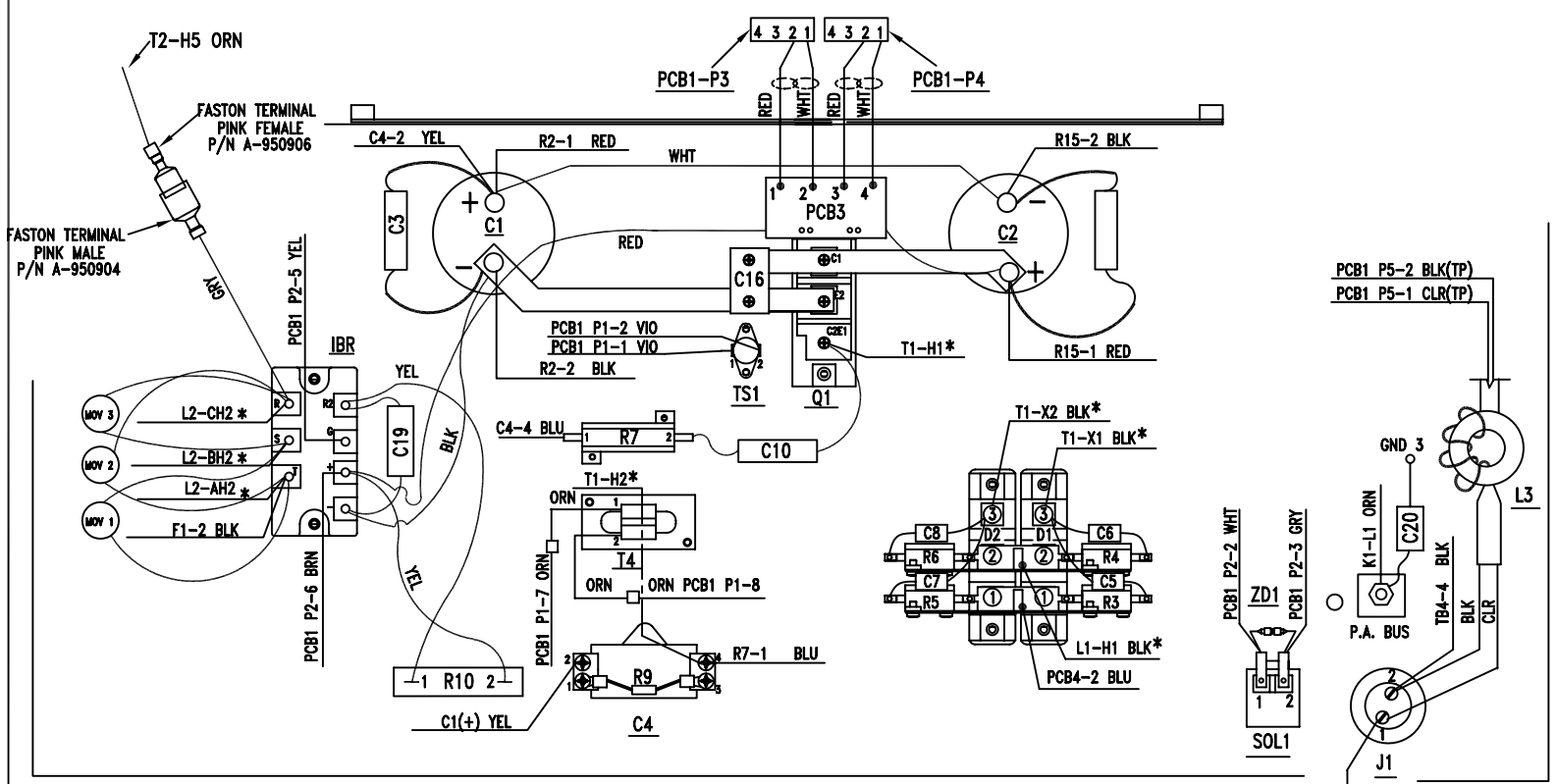

LEFT SIDE VIEW

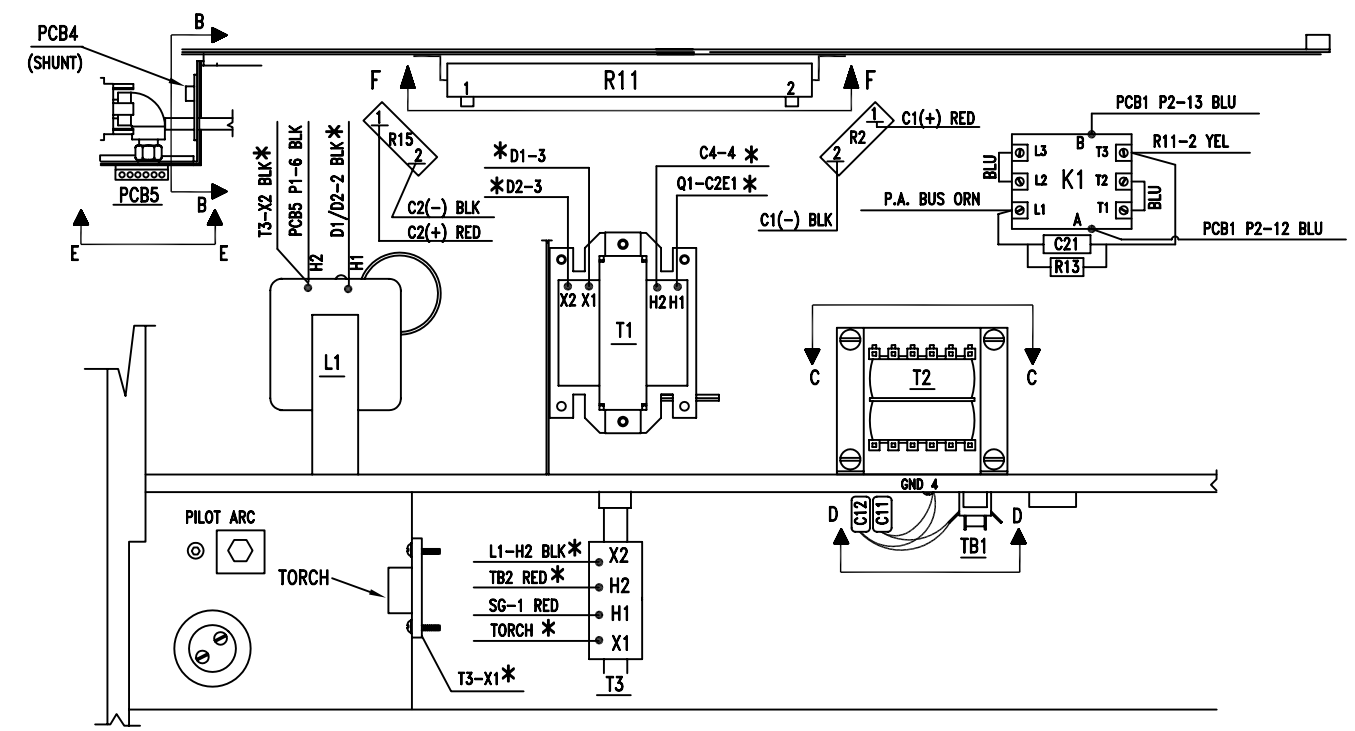

RIGHT SIDE VIEW

SHEET 2 OF 2

		SEE SHEET ONE			
M	LTR	CHANGE	BY	DATE	CHK'D

ENGLISH DWG.
UNLESS OTHERWISE SPECIFIED, DIM ARE IN INCHES.
TOL .XX ±
.XXX ±
ANGLES ±
CHAMFERS & C'SINKS ±2°
SURFACE ROUGHNESS IS IN MICROINCHES.
REMOVE ALL BURRS
BREAK SHARP EDGES

PA-6900-98-16 REV1 — RELEASED FOR — 06/26/98 — DATE

ESAB WELDING & CUTTING PRODUCTS
FLORENCE, SC 29501

TITLE: WIRING PCM 1125 575V

REPRO MADE FROM: SIMILAR TO D-36716

SCALE NONE

FIRST MADE FOR PCM 1125

SUP.

DRAWN	CHECKED	APPROVED	SUP. BY
BY JVB	BY WJB	BY KAM	D-37572
DATE 02/27/98	DATE 02/27/98	DATE 02/27/98	

OCT 1995